Retrouvez cette pièce sur nhp-motoculture.fr en cliquant sur le numéro de référence

STIGA

HT 100e (2027)

271300008/ST1

Spare parts list
Reservdelar
Repuestos
Ersatzteile
Pièces détachées
Reserve onderdelen
Catalogo ricambi

NHP Motoculture
Cultivez votre univers

- Use ST. S.p.A. Genuine Spare Parts specified in the parts list for repair and/or replacement.
- The contents described in the parts list may change due to improvement.
- The drawings of the spare parts are only indicative And might Not represent the part in question exactly.
- The indications "right" - "left" - "front" - "rear" refer to the position of the operator when using the machine.
- When placing orders of parts for repair And/Or replacement, make sure that the illustrated parts list Is the one applying to the machine's year of manufacture, as shown on the identification plate attached to the machine.

All rights reserved. No part Of this material may be reproduced Or transmitted, in any form Or by any means, electronic Or mechanical, including photocopying, recording Or by any information storage And retrieval system, without permision in writing from ST. S.p.A.

Copyright ST. S.P.A.

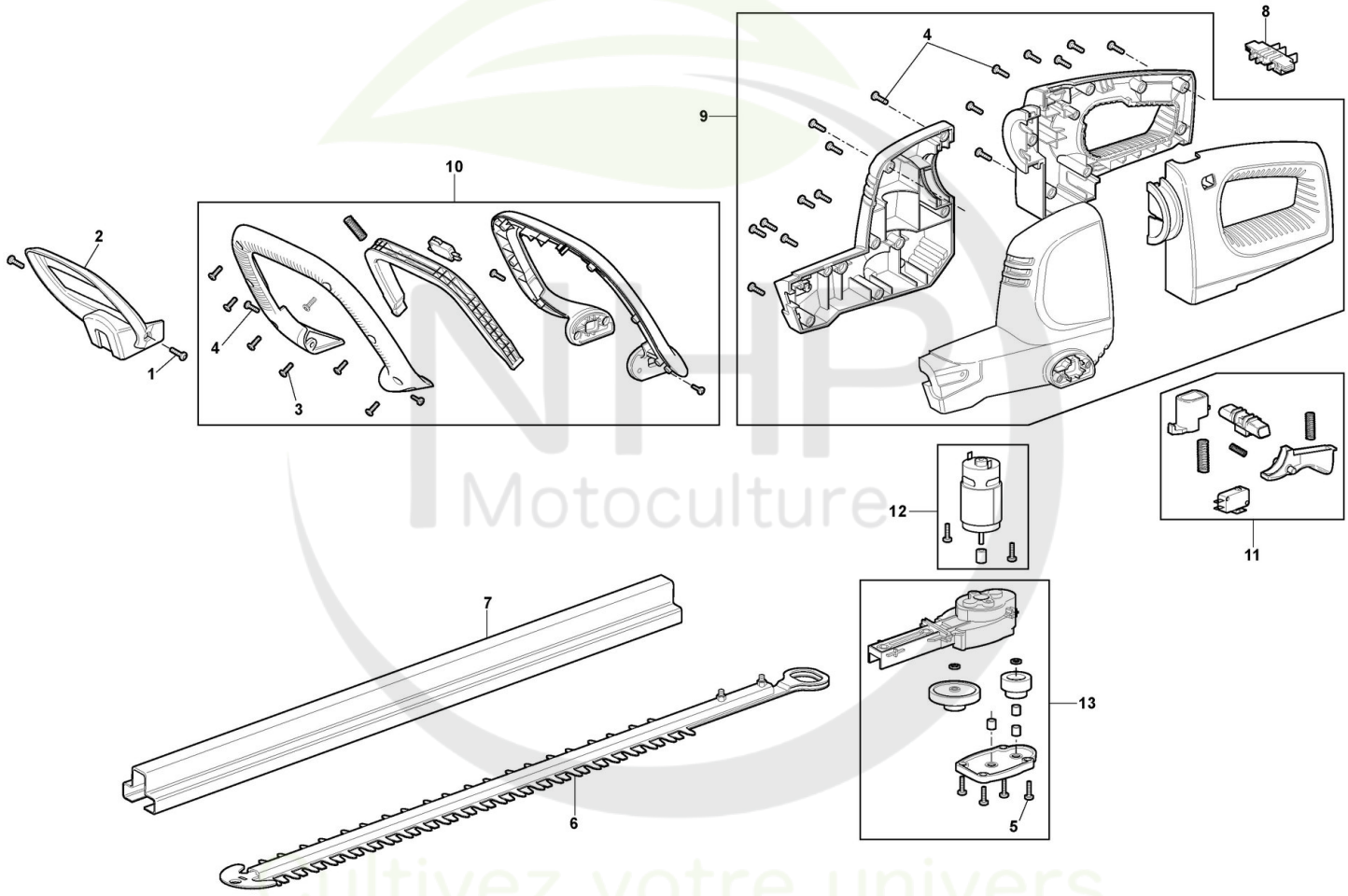

Copyright ST. S.P.A.

Taille Haies

Réf. N°	Q.té :	Code article	Description	Articles	De	Jusqu'à
1	2	2123060	Vis			
2	1	118811117/0 cliquez ici	Protection			
3	8	123878008/0 cliquez ici	Vis			
4	17	2123210	Vis			
5	4	112727356/0 cliquez ici	Vis			
6	1	118811082/0 cliquez ici	Ens. Lame			
7	1	118811083/0 cliquez ici	Couvre-Lame			
8	1	118811081/0 cliquez ici	connecteur de batterie			
9	1	118811112/0 cliquez ici	Ens Carter			
10	1	118811113/0 cliquez ici	Ens Poignée Avant			
11	1	118811114/0 cliquez ici	Ens Levier			
12	1	118811115/0 cliquez ici	Kit Moteur Électrique			
13	1	118811116/0 cliquez ici	Ens Engrenage			

NHP Motoculture
Cultivez votre univers

Copyright ST. S.P.A.

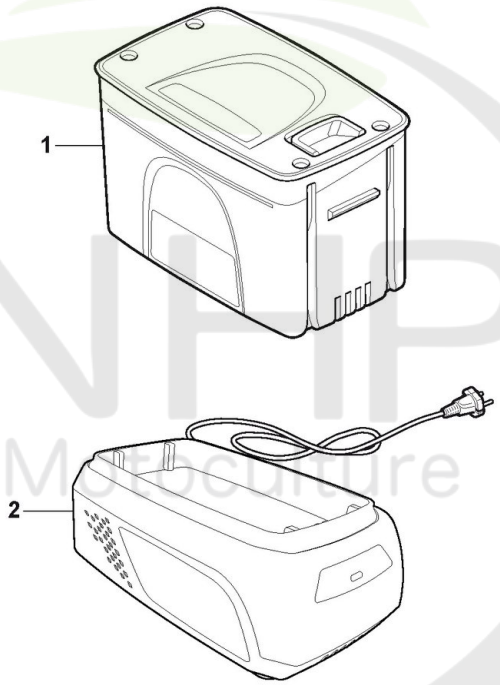

Please Note: These images are for illustrative purposes only.
For more info see descriptions.

NHP Motoculture
Cultivez votre univers

Copyright ST. S.P.A.

Batterie

Réf. N°	Q.té :	Code article	Description	Articles	De	Jusqu'à
1	1	271012008/ST1	Batterie 20V - 2Ah			
2	1	271028100/ST1	20V Double Chargeur - EU+BS prise			
2	1	271028200/26	20V Chargeur - EU+BS prise			

NHP Motoculture
Cultivez votre univers

Copyright ST. S.P.A.