Retrouvez cette pièce sur nhp-motoculture.fr en cliquant sur le numéro de référence

STIGA

BL 100e (2025)

271500008/ST1



Spare parts list
Reservdelar
Repuestos
Ersatzteile
Pièces détachées
Reserve onderdelen
Catalogo ricambi

NHP Motoculture
Cultivez votre univers

- Use ST. S.p.A. Genuine Spare Parts specified in the parts list for repair and/or replacement.
- The contents described in the parts list may change due to improvement.
- The drawings of the spare parts are only indicative And might Not represent the part in question exactly.
- The indications "right" - "left" - "front" - "rear" refer to the position of the operator when using the machine.
- When placing orders of parts for repair And/Or replacement, make sure that the illustrated parts list Is the one applying to the machine's year of manufacture, as shown on the identification plate attached to the machine.

All rights reserved. No part Of this material may be reproduced Or transmitted, in any form Or by any means, electronic Or mechanical, including photocopying, recording Or by any information storage And retrieval system, without permision in writing from ST. S.p.A.

Copyright ST. S.P.A.

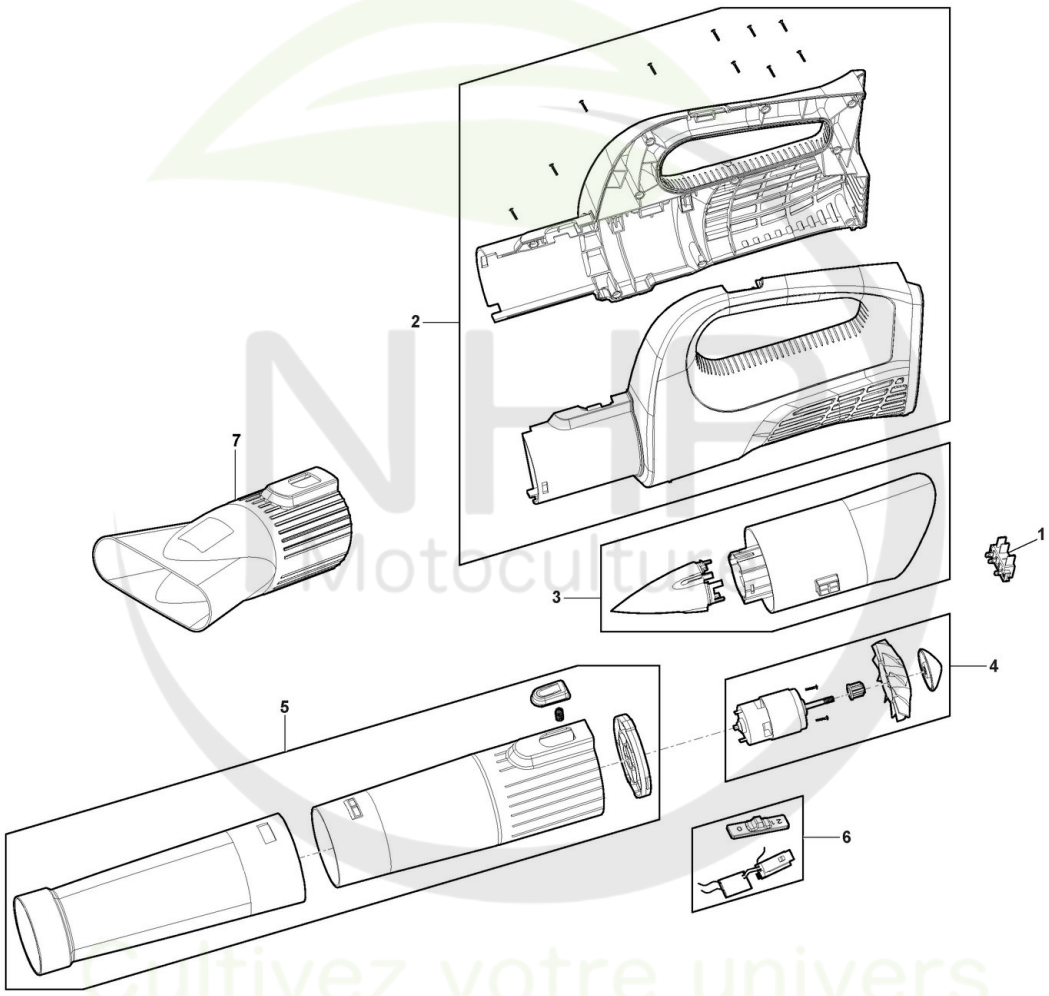

Copyright ST. S.P.A.

Blower

Réf. N°	Q.té :	Code article	Description	Articles	De	Jusqu'à
1	1	118811080/0 cliquez ici	connecteur de batterie			
2	1	118811106/0 cliquez ici	Ens Carter			
3	1	118811107/0 cliquez ici	Ens Conduit D'Air			
4	1	118811108/0 cliquez ici	Ens Moteur-Ventilateur			
5	1	118811109/0 cliquez ici	Ens. Tuyau Souffleur			
6	1	118811110/0 cliquez ici	Ens. PCB-Interrupteur			
7	1	118811618/0 cliquez ici	Tuyau Souffleur Court			

NHP Motoculture
Cultivez votre univers

Copyright ST. S.P.A.

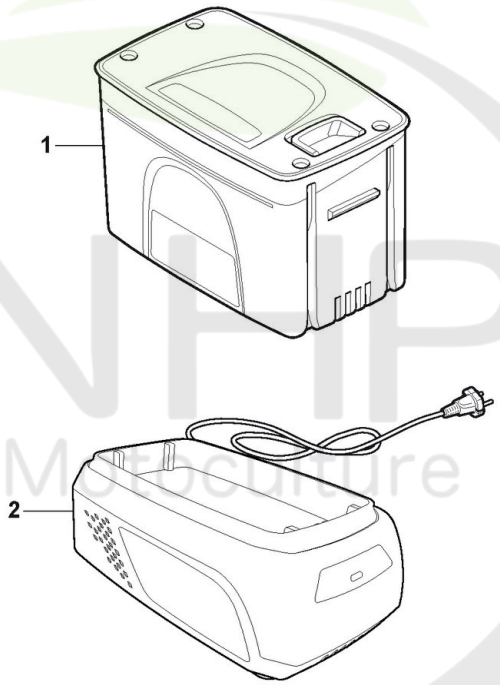

Please Note: These images are for illustrative purposes only.
For more info see descriptions.

NHP Motoculture
Cultivez votre univers

Copyright ST. S.P.A.

Batterie

Réf. N°	Q.té :	Code article	Description	Articles	De	Jusqu'à
1	1	271014008/ST1	Batterie 20V - 4Ah			
2	1	271020000/21	20V Chargeur - EU prise			
2	1	271020100/21	20V Double Chargeur - EU prise			
2	1	271021000/21	20V Chargeur - BS prise			
2	1	271021100/21	20V Double Chargeur - BS prise			
2	1	271028200/26	20V Chargeur - EU+BS prise			

NHP Motoculture
Cultivez votre univers

Copyright ST. S.P.A.