Retrouvez cette pièce sur nhp-motoculture.fr en cliquant sur le numéro de référence

STIGA

BL 500e Kit with battery 2,0 Ah (2024)

278502108/ST3

Spare parts list
Reservdelar
Repuestos
Ersatzteile
Pièces détachées
Reserve onderdelen
Catalogo ricambi

NHP Motoculture
Cultivez votre univers

- Use ST. S.p.A. Genuine Spare Parts specified in the parts list for repair and/or replacement.
- The contents described in the parts list may change due to improvement.
- The drawings of the spare parts are only indicative And might Not represent the part in question exactly.
- The indications "right" - "left" - "front" - "rear" refer to the position of the operator when using the machine.
- When placing orders of parts for repair And/Or replacement, make sure that the illustrated parts list Is the one applying to the machine's year of manufacture, as shown on the identification plate attached to the machine.

All rights reserved. No part Of this material may be reproduced Or transmitted, in any form Or by any means, electronic Or mechanical, including photocopying, recording Or by any information storage And retrieval system, without permision in writing from ST. S.p.A.

Copyright ST. S.P.A.

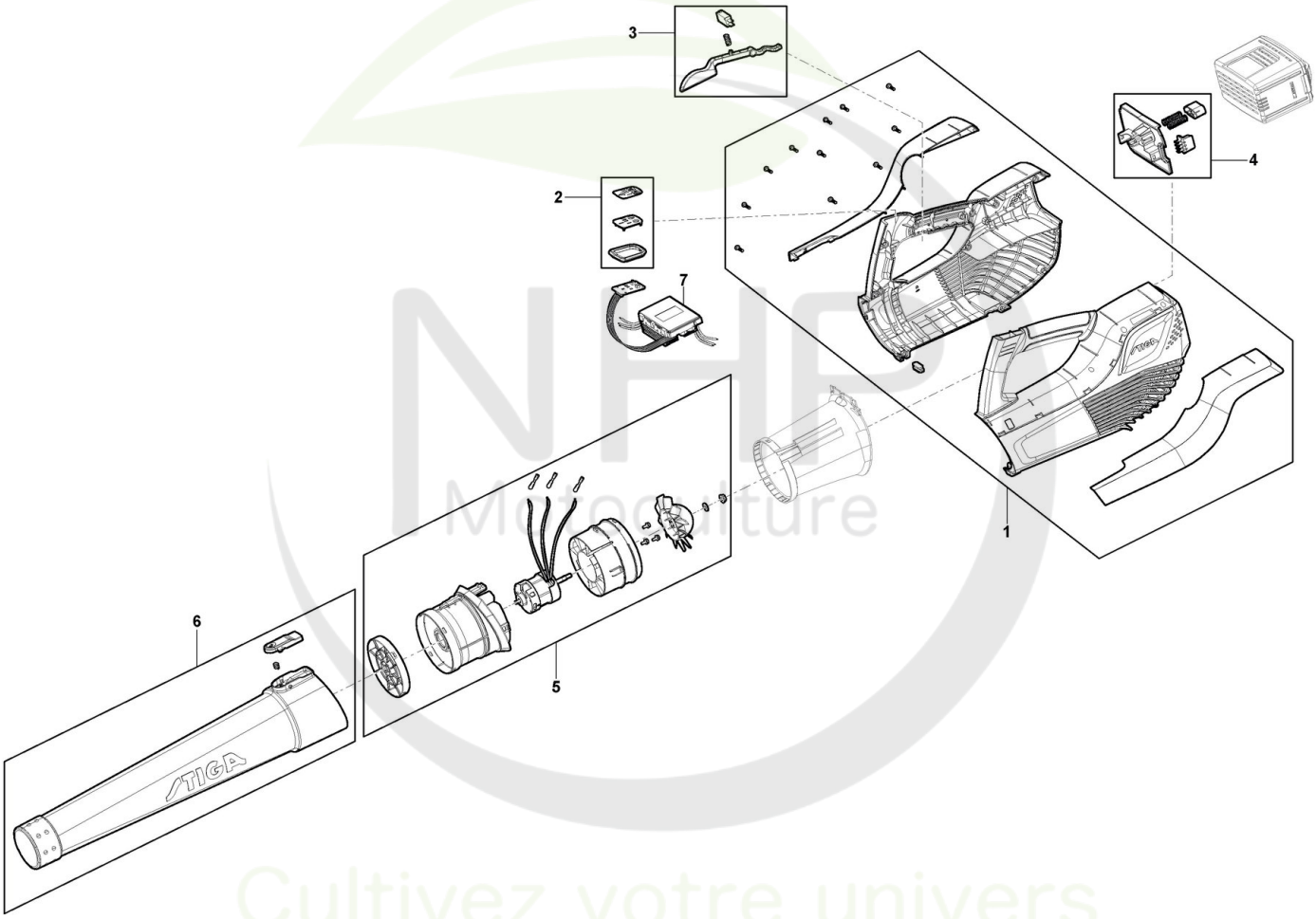

Copyright ST. S.P.A.

Souffleur a Batterie

Réf. N°	Q.té :	Code article	Description	Articles	De	Jusqu'à
1	1	118810774/0 cliquez ici	Ens Carter, Gris-Jaune			
2	1	118810775/0 cliquez ici	Kit Interrupter Capot			
3	1	118810776/0 cliquez ici	Levier Set			
4	1	118810777/0 cliquez ici	Ens. Boîtier de la Batterie			
5	1	118810773/0 cliquez ici	Kit Moteur Électrique			
6	1	118810772/0 cliquez ici	Ens. Tuyau Aspirateur			
7	1	118810811/0 cliquez ici	Carte Electronique			

NHP Motoculture
Cultivez votre univers

Copyright ST. S.P.A.

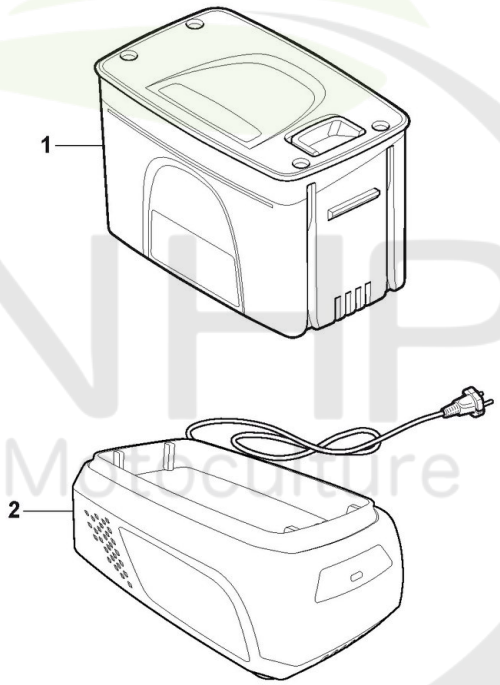

Please Note: These images are for illustrative purposes only.
For more info see descriptions.

NHP Motoculture
Cultivez votre univers

Copyright ST. S.P.A.

Batterie

Réf. N°	Q.té :	Code article	Description	Articles	De	Jusqu'à
1	1	277012008/ST1	Batterie 48V - 2Ah	48V - 2Ah		
2	1	277020008/ST1	48V Chargeur - EU prise			
2	1	277020208/ST1	48V Double Chargeur - EU prise			
2	1	277021008/ST1	48V Chargeur - BS prise			
2	1	277021208/ST1	48V Double Chargeur - BS prise			
2	1	277030008/ST1	48V Chargeur Rapide - EU prise			
2	1	277031008/ST1	48V Chargeur Rapide - BS prise			

NHP Motoculture
Cultivez votre univers

Copyright ST. S.P.A.

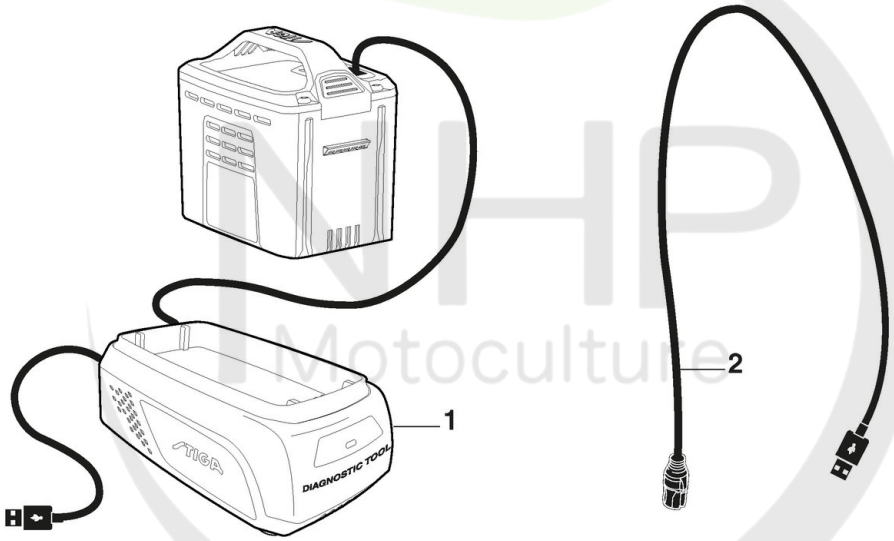

Copyright ST. S.P.A.

Diagnostic Tool

Réf. N°	Q.té :	Code article	Description	Articles	De	Jusqu'à
1	1	118810754/0 cliquez ici	Diagnostic Tool 48V			
2	1	118811363/0 cliquez ici	Cable			

NHP Motoculture
Cultivez votre univers

Copyright ST. S.P.A.