Retrouvez cette pièce sur nhp-motoculture.fr en cliquant sur le numéro de référence

# STIGA

## SAB 500 AE Kit (2021)

278502108/ST2




# Spare parts list
# Reservdelar
# Repuestos
# Ersatzteile
# Pièces détachées
# Reserve onderdelen
# Catalogo ricambi

NHP Motoculture
Cultivez votre univers

- Use ST. S.p.A.  Genuine Spare Parts specified in the parts list for repair and/or replacement.
- The contents described in the parts list may change due to improvement.
- The drawings of the spare parts are only indicative And might Not represent the part in question exactly.
- The indications "right" - "left" - "front" - "rear" refer to the position of the operator when using the machine.
- When placing orders of parts for repair And/Or replacement, make sure that the illustrated parts list Is the one applying to the machine's year of manufacture, as shown on the identification plate attached to the machine.

All rights reserved. No part Of this material may be reproduced Or transmitted, in any form Or by any means, electronic Or mechanical, including photocopying, recording Or by any information storage And retrieval system, without permision in writing from ST. S.p.A.



Copyright ST. S.P.A.

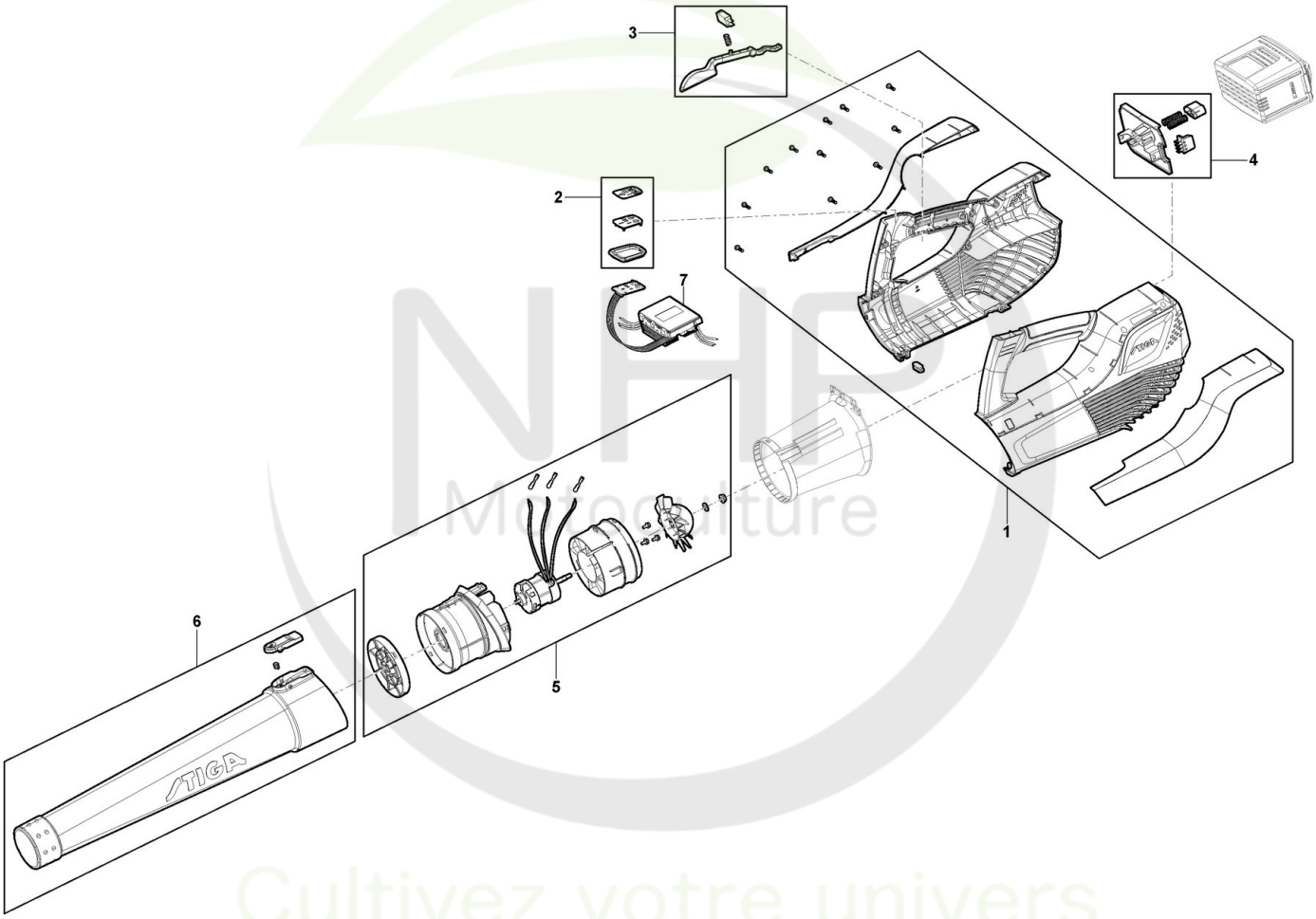



Copyright ST. S.P.A.

# Souffleur a Batterie

| Réf. N° | Q.té : | Code article | Description | Articles | De | Jusqu'à |
|---|---|---|---|---|---|---|
| 1 | 1 | 118810774/0 cliquez ici | Ens Carter, Gris-Jaune | | | |
| 2 | 1 | 118810775/0 cliquez ici | Kit Interrupter Capot | | | |
| 3 | 1 | 118810776/0 cliquez ici | Levier Set | | | |
| 4 | 1 | 118810777/0 cliquez ici | Ens. Boîtier de la Batterie | | | |
| 5 | 1 | 118810773/0 cliquez ici | Kit Moteur Électrique | | | |
| 6 | 1 | 118810772/0 cliquez ici | Ens. Tuyau Aspirateur | | | |
| 7 | 1 | 118810811/0 cliquez ici | Carte Electronique | | | |

NHP Motoculture
Cultivez votre univers


Copyright ST. S.P.A.

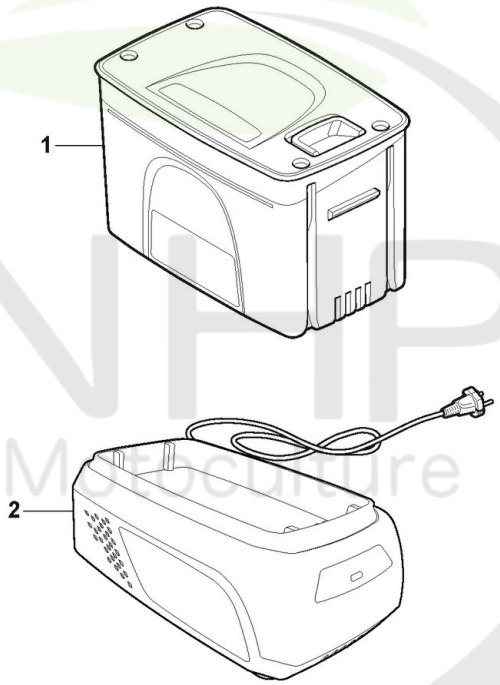


Please Note: These images are for illustrative purposes only.
For more info see descriptions.

NHP Motoculture
Cultivez votre univers


Copyright ST. S.P.A.

## Batterie

| Réf. N° | Q.té : | Code article | Description | Articles | De | Jusqu'à |
|---|---|---|---|---|---|---|
| 1 | 1 | 277012008/ST1 | Batterie 48V - 2Ah | 48V - 2Ah | | |
| 2 | 1 | 277020008/ST1 | 48V Chargeur - EU prise | | | |
| 2 | 1 | 277020208/ST1 | 48V Double Chargeur - EU prise | | | |
| 2 | 1 | 277021008/ST1 | 48V Chargeur - BS prise | | | |
| 2 | 1 | 277021208/ST1 | 48V Double Chargeur - BS prise | | | |
| 2 | 1 | 277030008/ST1 | 48V Chargeur Rapide - EU prise | | | |
| 2 | 1 | 277031008/ST1 | 48V Chargeur Rapide - BS prise | | | |

NHP Motoculture
Cultivez votre univers


Copyright ST. S.P.A.

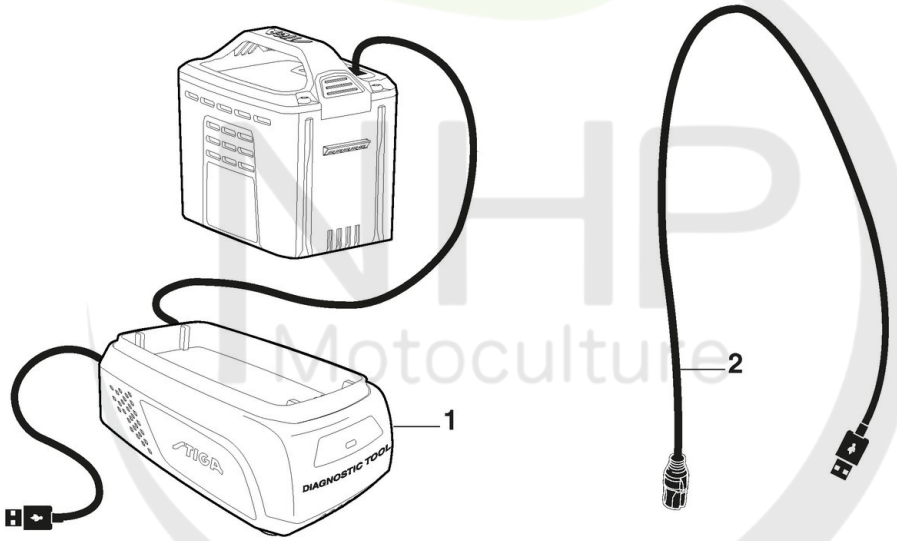



Copyright ST. S.P.A.

# Diagnostic Tool

| Réf. N° | Q.té : | Code article | Description | Articles | De | Jusqu'à |
|---|---|---|---|---|---|---|
| 1 | 1 | 118810754/0 cliquez ici | Diagnostic Tool 48V | | | |
| 2 | 1 | 118811363/0 cliquez ici | Cable | | | |

NHP Motoculture
Cultivez votre univers


Copyright ST. S.P.A.