Retrouvez cette pièce sur nhp-motoculture.fr en cliquant sur le numéro de référence

# STIGA

## GT 100e Kit (2022)

271102108/ST2



## Spare parts list
## Reservdelar
## Repuestos
## Ersatzteile
## Pièces détachées
## Reserve onderdelen
## Catalogo ricambi

NHP Motoculture
Cultivez votre univers

- Use ST. S.p.A.  Genuine Spare Parts specified in the parts list for repair and/or replacement.
- The contents described in the parts list may change due to improvement.
- The drawings of the spare parts are only indicative And might Not represent the part in question exactly.
- The indications "right" - "left" - "front" - "rear" refer to the position of the operator when using the machine.
- When placing orders of parts for repair And/Or replacement, make sure that the illustrated parts list Is the one applying to the machine's year of manufacture, as shown on the identification plate attached to the machine.

All rights reserved. No part Of this material may be reproduced Or transmitted, in any form Or by any means, electronic Or mechanical, including photocopying, recording Or by any information storage And retrieval system, without permision in writing from ST. S.p.A.



Copyright ST. S.P.A.

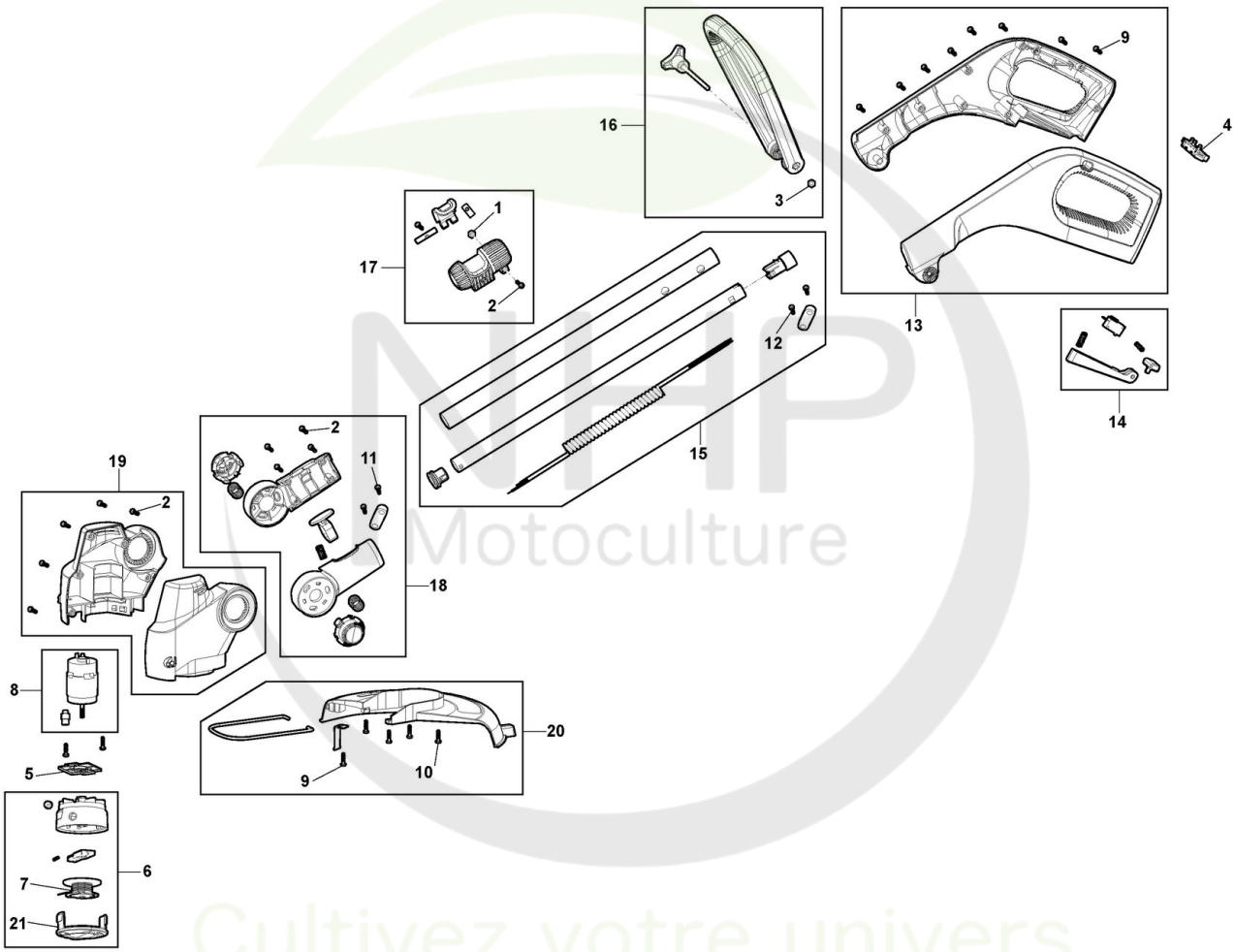



Copyright ST. S.P.A.

# Coupe-bords Batterie

| Réf. N° | Q.té : | Code article | Description | Articles | De | Jusqu'à |
|---|---|---|---|---|---|---|
| 1 | 1 | 112150000/0 cliquez ici | Ecrou | | | |
| 2 | 10 | 112728099/1 cliquez ici | Vis | | | |
| 3 | 1 | 112292100/0 cliquez ici | Écrou - M6 | | | |
| 4 | 1 | 118811080/0 cliquez ici | connecteur de batterie | | | |
| 5 | 1 | 118811086/0 cliquez ici | Moteur Support | | | |
| 6 | 1 | 118805320/0 cliquez ici | Kit Tête À Fils Nylon | | | |
| 7 | 1 | 1911-9292-01 cliquez ici | Ens. Bobine | | | |
| 8 | 1 | 118811088/0 cliquez ici | Moteur Électrique | | | |
| 9 | 9 | 123878121/0 cliquez ici | Vis | | | |
| 10 | 4 | 112728099/1 cliquez ici | Vis | | | |
| 11 | 2 | 112727810/0 cliquez ici | Vis | | | |
| 12 | 2 | 112727356/0 cliquez ici | Vis | | | |
| 13 | 1 | 118811146/0 cliquez ici | Ens Carter | | | |
| 14 | 1 | 118811147/0 cliquez ici | Levier Set | | | |
| 15 | 1 | 118811148/0 cliquez ici | Ens.Tube Transmission | | | |
| 16 | 1 | 118811149/0 cliquez ici | Ens Poignée | | | |
| 17 | 1 | 118811150/0 cliquez ici | Ens Joint | | | |
| 18 | 1 | 118811151/0 cliquez ici | Ens. Joints de Rotation | | | |
| 19 | 1 | 118811152/0 cliquez ici | Kit Carter Moteur | | | |
| 20 | 1 | 118811153/0 cliquez ici | Ens. Pare-Pierres | | | |
| 21 | 1 | 118811511/0 cliquez ici | Couvercle Inferieur | | | |

NHP Motoculture
Cultivez votre univers


Copyright ST. S.P.A.

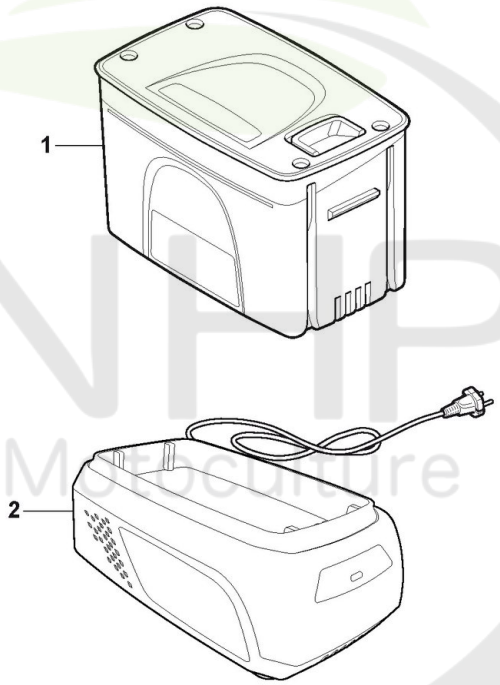


Please Note: These images are for illustrative purposes only.
For more info see descriptions.

Cultivez votre univers


Copyright ST. S.P.A.

## Batterie

| Réf. N° | Q.té : | Code article | Description | Articles | De | Jusqu'à |
|---|---|---|---|---|---|---|
| 1 | 1 | 271012008/ST1 | Batterie 20V - 2Ah | | | |
| 2 | 1 | 271020000/21 | 20V Chargeur - EU prise | | | |
| 2 | 1 | 271020100/21 | 20V Double Chargeur - EU prise | | | |
| 2 | 1 | 271021000/21 | 20V Chargeur - BS prise | | | |
| 2 | 1 | 271021100/21 | 20V Double Chargeur - BS prise | | | |
| 2 | 1 | 271028200/26 | 20V Chargeur - EU+BS prise | | | |

NHP Motoculture
Cultivez votre univers


Copyright ST. S.P.A.