Retrouvez cette pièce sur nhp-motoculture.fr en cliquant sur le numéro de référence

STIGA

TR 425 HJ (2023)

281210003/21



Spare parts list
Reservdelar
Repuestos
Ersatzteile
Pièces détachées
Reserve onderdelen
Catalogo ricambi

NHP Motoculture
Cultivez votre univers

- Use ST. S.p.A. Genuine Spare Parts specified in the parts list for repair and/or replacement.
- The contents described in the parts list may change due to improvement.
- The drawings of the spare parts are only indicative And might Not represent the part in question exactly.
- The indications "right" - "left" - "front" - "rear" refer to the position of the operator when using the machine.
- When placing orders of parts for repair And/Or replacement, make sure that the illustrated parts list Is the one applying to the machine's year of manufacture, as shown on the identification plate attached to the machine.

All rights reserved. No part Of this material may be reproduced Or transmitted, in any form Or by any means, electronic Or mechanical, including photocopying, recording Or by any information storage And retrieval system, without permision in writing from ST. S.p.A.

Copyright ST. S.P.A.

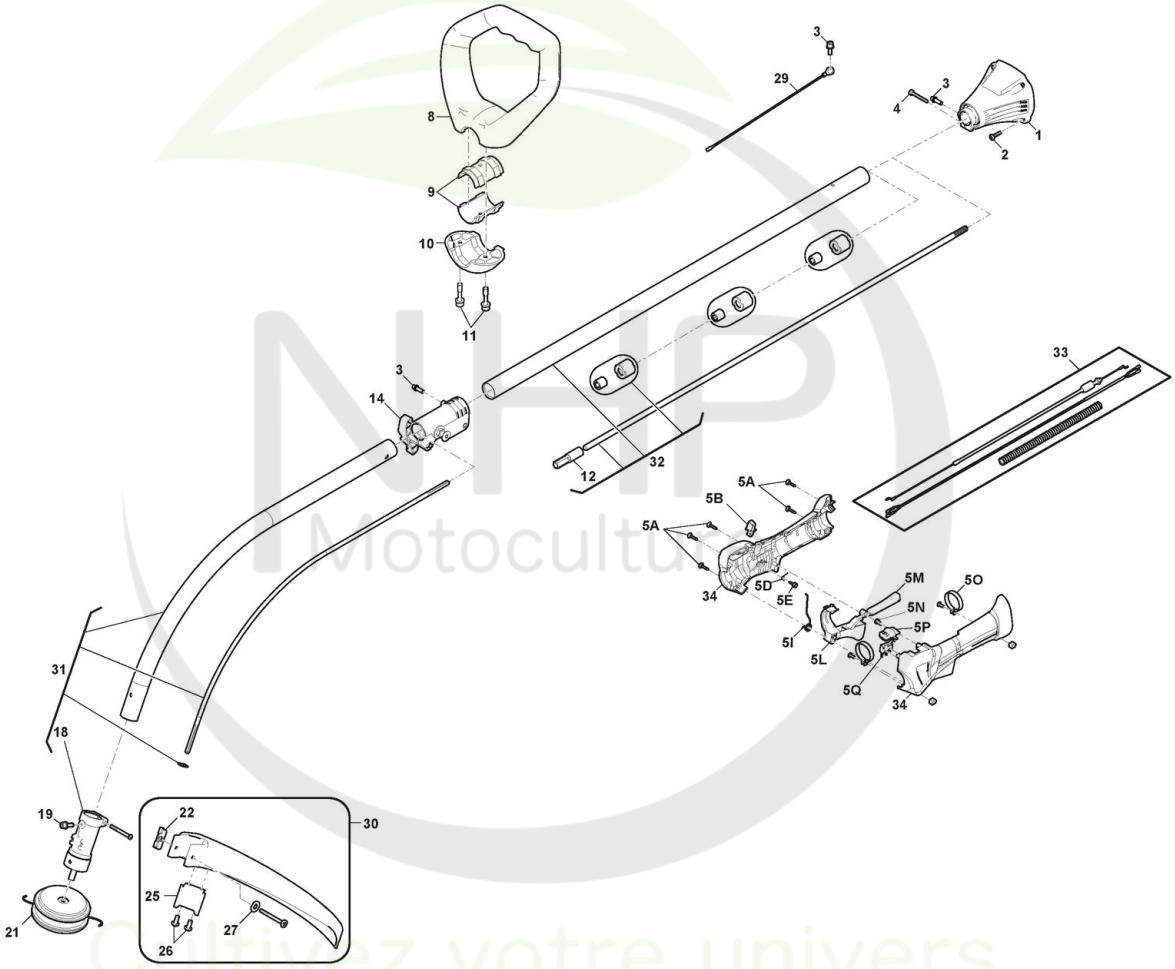

Copyright ST. S.P.A.

Réf. N°	Q.té :	Code article	Description	Articles	De	Jusqu'à
1	1	118805424/0 cliquez ici	Ens.Support Transm.			
2	4	2132180	Vis			
3	3	6981117	Vis			
4	1	2132180	Vis			
5A	6	112727810/0 cliquez ici	Vis			
5B	1	118805450/0 cliquez ici	Bouton			
5D	1	118805451/0 cliquez ici	Rondelle De Tension			
5I	1	118805452/0 cliquez ici	Rondelle De Tension			
5L	1	118805453/0 cliquez ici	Levier Accélérateur			
5M	1	118805454/0 cliquez ici	Levier De Sécurité			
5N	1	118805455/0 cliquez ici	Rondelle De Tension			
5O	2	118805456/0 cliquez ici	Etrier			
5P	1	118805457/0 cliquez ici	Interrupteur			
5Q	1	118805458/0 cliquez ici	Interrupteur			
5E	1	9849-7809-16 cliquez ici	Vis			
8	1	118805474/0 cliquez ici	Poignée Avant			
9	2	118805461/0 cliquez ici	connecting sleeve			
10	1	118805475/0 cliquez ici	Plaque De Fixation			
11	2	123878129/0 cliquez ici	Vis			
12	1	118805459/0 cliquez ici	Raccord Arbre Transmission			
14	1	118805463/0 cliquez ici	Raccord Arbre Transmission			
18	1	118805477/0 cliquez ici	Raccord Arbre Transmission			
19	1	6981117	Vis			
21	1	1911-9197-01 cliquez ici	Ens. Tête Fils			
22	1	118805478/0 cliquez ici	Plaque De Fixation			
25	1	118805479/0 cliquez ici	Lame Coupe-Fil			
26	2	112728440/0 cliquez ici	Vis			
27	1	112523020/0 cliquez ici	Rondelle			
29	1	118805446/0 cliquez ici	Câble Arrêt			
30	1	118805480/0 cliquez ici	Ens. Pare-Pierres			
31	1	118805476/0 cliquez ici	Ens.Arbre Transmission	To 30 November 2020		
31	1	118805713/0 cliquez ici	Ens.Tube Transm.	From 1 December 2020		
32	1	118805447/0 cliquez ici	Transmission Back Shaft Assembly	To 30 November 2020		
32	1	118805712/0 cliquez ici	Ens.Tube Transm.	From 1 December 2020		
33	1	118805449/0 cliquez ici	Ens. Cable			
34	1	118805448/0 cliquez ici	Kit de poignée droite et gauche	Right + Left Handgrip		

Copyright ST. S.P.A.

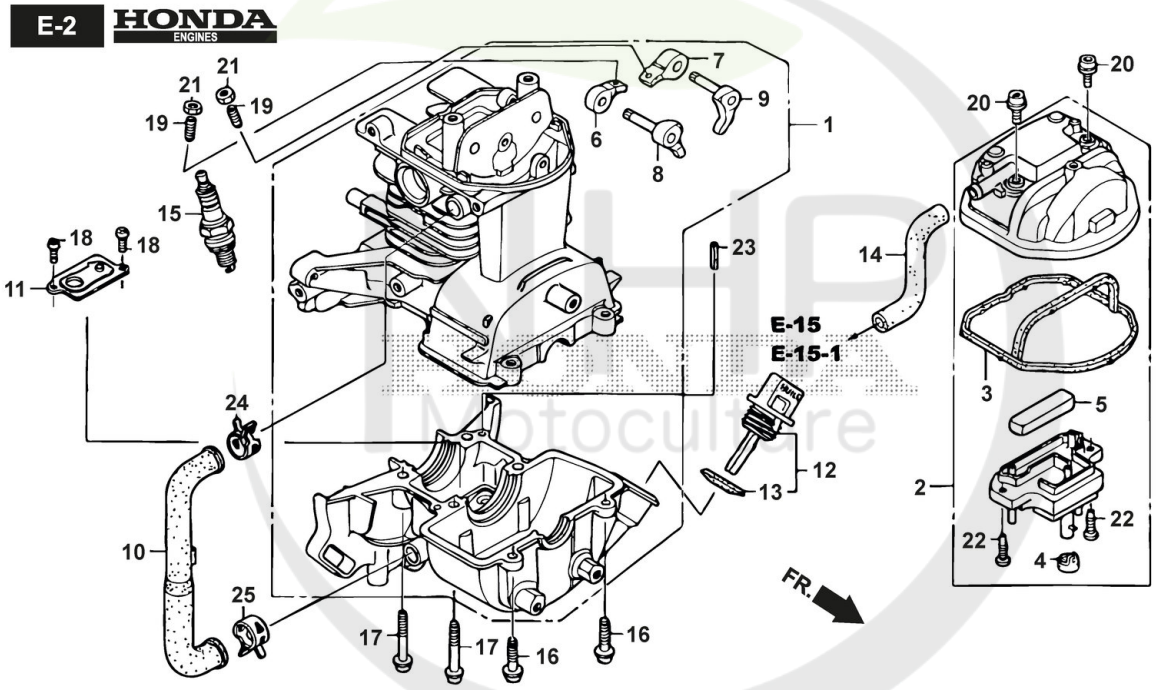

Copyright ST. S.P.A.

Crankcase

Réf. N°	Q.té :	Code article	Description	Articles	De	Jusqu'à
1	1	118551708/0 cliquez ici	Crankcase Set	Honda: 10100-Z3E-415		
2	1	118551742/0 cliquez ici	Cover, Cylinder Head	Honda: 12310-Z0H-010		
3	1	118551745/0 cliquez ici	Seal, Head Cover	Honda: 12312-Z0H-300		
4	1	HONDA_SP	Honda Spare Parts	Honda: 12314-Z0H-300 - GROMMET, HEAD COVER		
5	1	118551751/0 cliquez ici	Filter, Breather	Honda: 12367-Z0H-000		
6	1	118551830/0 cliquez ici	Arm, In. Valve Rocker	Honda: 14431-Z0H-003		
7	1	118551837/0 cliquez ici	Arm, Ex. Valve Rocker	Honda: 14441-Z0H-003		
8	1	118551863/0 cliquez ici	Lifter Comp., In. Valve	Honda: 14730-Z0H-000		
9	1	118551867/0 cliquez ici	Lifter Comp., Ex. Valve	Honda: 14740-Z0H-000		
10	1	118551897/0 cliquez ici	Tube, Oil	Honda: 15422-Z0H-000		
11	1	118551901/0 cliquez ici	Plate Assy., Oil Outlet Valve	Honda: 15510-Z3E-000		
12	1	118551905/0 cliquez ici	Cap Assy., Oil Filler	Honda: 15600-Z0T-800		
13	1	118551704/0 cliquez ici	Plug, Spark (Cmr5H) (Ngk)	Honda: 31915-Z0H-003		
13	1	HONDA_SP	Honda Spare Parts	Honda: 15625-Z0T-800 - PACKING, OIL FILLER CAP		
13	1	HONDA_SP	Honda Spare Parts	Honda: 31914-Z0H-003 - plug, SPARK (CMR4H) (NGK)		
13	1	HONDA_SP	Honda Spare Parts	Honda: 31916-Z0H-003 - plug, SPARK (CMR6H) (NGK)		
14	1	118551919/0 cliquez ici	Tube, Breather	Honda: 15721-Z0H-000		
14	2	HONDA_SP	Honda Spare Parts	Honda: 90009-Z0H-003 - BOLT, SOCKET, 5X20		
15	1	118551704/0 cliquez ici	Plug, Spark (Cmr5H) (Ngk)	Honda: 31915-Z0H-003		
15	1	HONDA_SP	Honda Spare Parts	Honda: 31914-Z0H-003 - plug, SPARK (CMR4H) (NGK)		
15	1	HONDA_SP	Honda Spare Parts	Honda: 31916-Z0H-003 - plug, SPARK (CMR6H) (NGK)		
16	2	HONDA_SP	Honda Spare Parts	Honda: 90009-Z3E-901 - BOLT, SOCKET, 5X20		
16	2	HONDA_SP	Honda Spare Parts	Honda: 90009-Z0H-003 - BOLT, SOCKET, 5X20		
17	4	HONDA_SP	Honda Spare Parts	Honda: 90010-Z0Z-003 - BOLT, SOCKET, 5X32		
18	2	HONDA_SP	Honda Spare Parts	Honda: 90013-Z3E-003 - SCREW, PAN, 4X8		
19	2	HONDA_SP	Honda Spare Parts	Honda: 90017-Z0H-000 - SCREW, TAPPET ADJUSTING		
20	2	HONDA_SP	Honda Spare Parts	Honda: 90019-Z0H-003 - BOLT, SOCKET, 5X12		
21	2	HONDA_SP	Honda Spare Parts	Honda: 90206-ZM3-000 - NUT, TAPPET ADJUSTING		
22	2	HONDA_SP	Honda Spare Parts	Honda: 93901-34320 - SCREW, TAPPING, 4X12		
23	2	HONDA_SP	Honda Spare Parts	Honda: 94305-40102 - PIN, SPRING, 4X10		
24	1	HONDA_SP	Honda Spare Parts	Honda: 95002-4120008 - CLAMP, TUBE (D12)		
25	1	HONDA_SP	Honda Spare Parts	Honda: 95002-4130004 - CLAMP, TUBE (D13)		

Copyright ST. S.P.A.

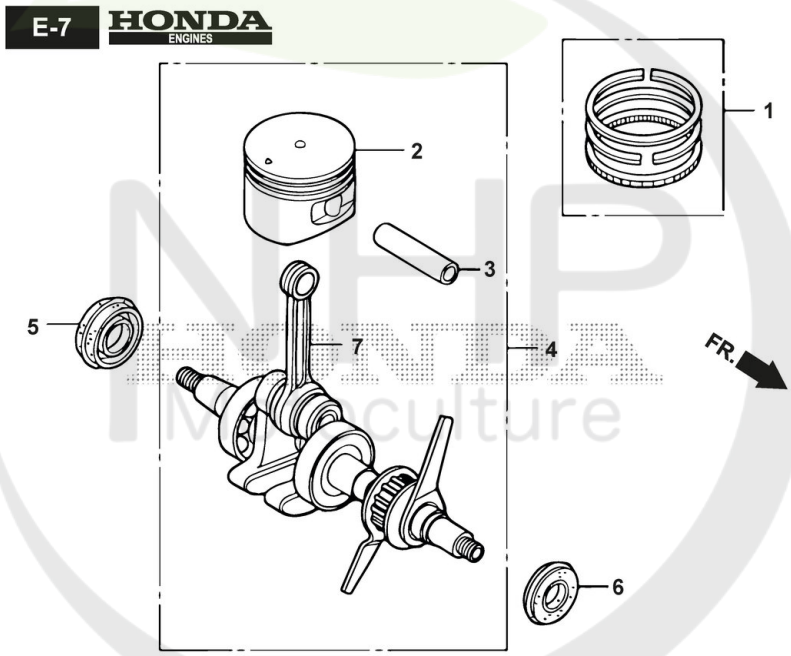

Cultivez votre univers

Copyright ST. S.P.A.

Crankshaft/Piston

Réf. N°	Q.té :	Code article	Description	Articles	De	Jusqu'à
1	1	118551760/0 cliquez ici	Ring Set, Piston (Tpr)	Honda: 13010-Z3E-003		
2	1	118551769/0 cliquez ici	Piston	Honda: 13101-Z3E-000		
3	1	118551779/0 cliquez ici	Pin, Piston	Honda: 13111-Z0H-000		
4	1	HONDA_SP	Honda Spare Parts	Honda: 13310-Z3E-900 - CRANKSHAFT COMP.		
5	1	118552256/0 cliquez ici	Oil Seal, 12X24X5	Honda: 91211-Z3E-003		
6	1	118552257/0 cliquez ici	Oil Seal, 10X20X5	Honda: 91212-Z3E-003		
7	1	118551797/0 cliquez ici	Crankshaft Comp.	Honda: 13310-Z3E-309		

NHP Motoculture
Cultivez votre univers

Copyright ST. S.P.A.

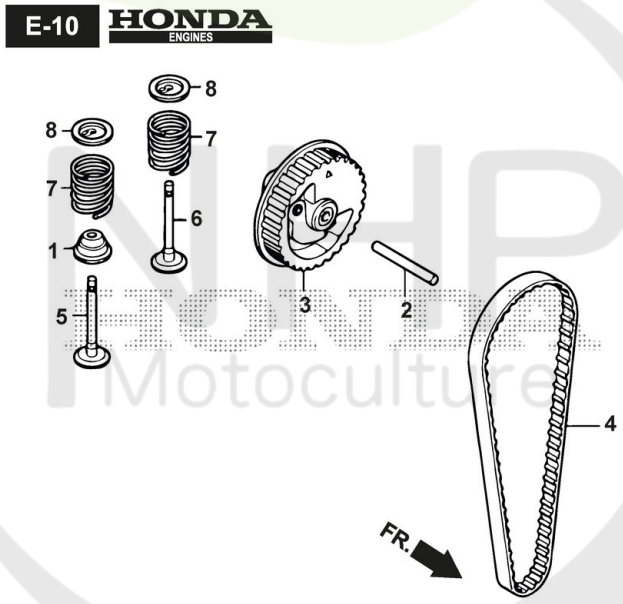

Cultivez votre univers

Copyright ST. S.P.A.

Cam Pulley

Réf. N°	Q.té :	Code article	Description	Articles	De	Jusqu'à
1	1	118551736/0 cliquez ici	Seal, Valve Stem	Honda: 12209-Z3E-003		
2	1	HONDA_SP	Honda Spare Parts	Honda: 14126-Z0H-003 - ROLLER, 4X29.8		
3	1	118551818/0 cliquez ici	Pulley Comp., Camshaft	Honda: 14320-Z0H-010		
4	1	118551823/0 cliquez ici	Belt, Timing (71Zu6 G-300)	Honda: 14400-Z3E-013		
5	1	118551848/0 cliquez ici	Valve, In. (Hi)	Honda: 14711-Z3E-000		
6	1	118551856/0 cliquez ici	Valve, Ex.	Honda: 14721-Z3E-000		
7	2	118551869/0 cliquez ici	Spring, Valve	Honda: 14751-Z0H-000		
8	2	118551877/0 cliquez ici	Retainer, Valve Spring	Honda: 14771-Z3F-000		

NHP Motoculture
Cultivez votre univers

Copyright ST. S.P.A.

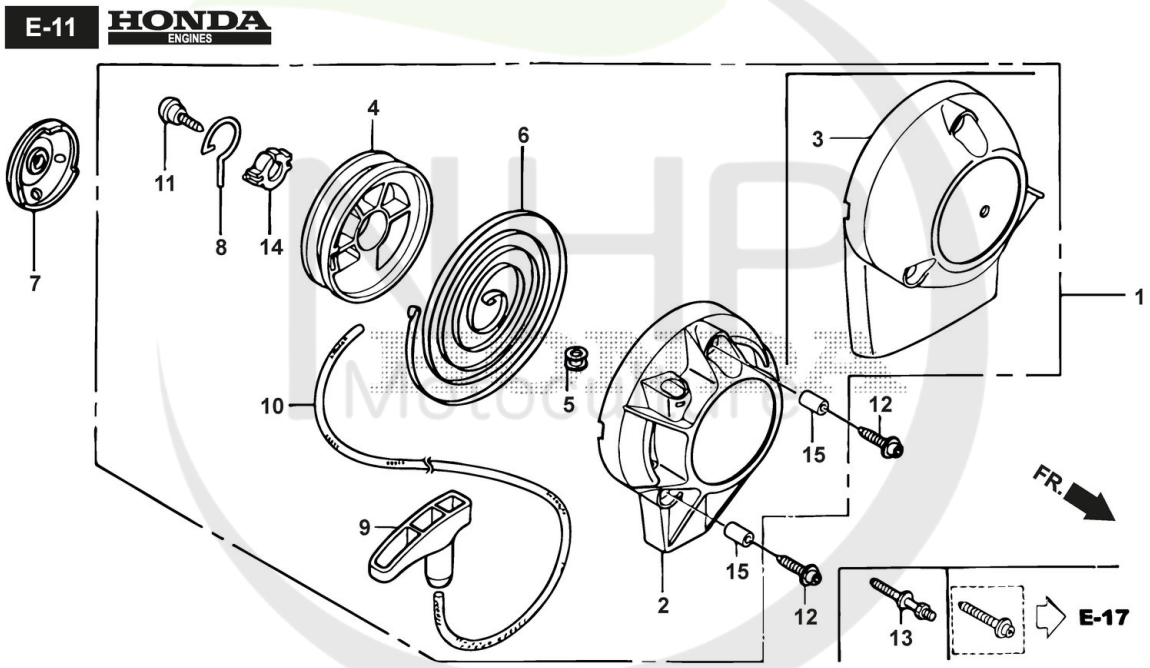

Cultivez votre univers

Copyright ST. S.P.A.

Démarreur

Réf. N°	Q.té :	Code article	Description	Articles	De	Jusqu'à
1	1	118551686/0 cliquez ici	Starter Assy., Recoil	Honda: 28400-Z3E-M01		
2	1	HONDA_SP	Honda Spare Parts	Honda: 28414-Z0H-003 - CASE, RECOIL STARTER		
3	1	118552140/0 cliquez ici	Reel, Recoil Starter	Honda: 28421-Z0H-003		
4	1	118552140/0 cliquez ici	Reel, Recoil Starter	Honda: 28421-Z0H-003		
5	1	118552146/0 cliquez ici	Spring, Recoil Starter	Honda: 28442-Z0H-003		
6	1	118552151/0 cliquez ici	Pulley, Recoil Starter	Honda: 28451-Z0H-003		
8	1	118552159/0 cliquez ici	Arm, Swing	Honda: 28459-Z0H-003		
9	1	118552160/0 cliquez ici	Knob, Recoil Starter	Honda: 28461-Z3F-M01		
10	1	HONDA_SP	Honda Spare Parts	Honda: 28462-ZM3-003 - ROPE, RECOIL STARTER		
11	1	118552224/0 cliquez ici	Screw, Setting	Honda: 90012-ZM3-003		
12	3	HONDA_SP	Honda Spare Parts	Honda: 90018-Z3E-901 - BOLT, SOCKET, 5X16		
13	3	HONDA_SP	Honda Spare Parts	Honda: 91506-ZM3-000 - COLLAR A, HEAD COVER		
14	1	118552271/0 cliquez ici	Collar	Honda: 91504-ZM3-003		
15	3	HONDA_SP	Honda Spare Parts	Honda: 91506-ZM3-000 - COLLAR A, HEAD COVER		

NHP Motoculture
Cultivez votre univers

Copyright ST. S.P.A.

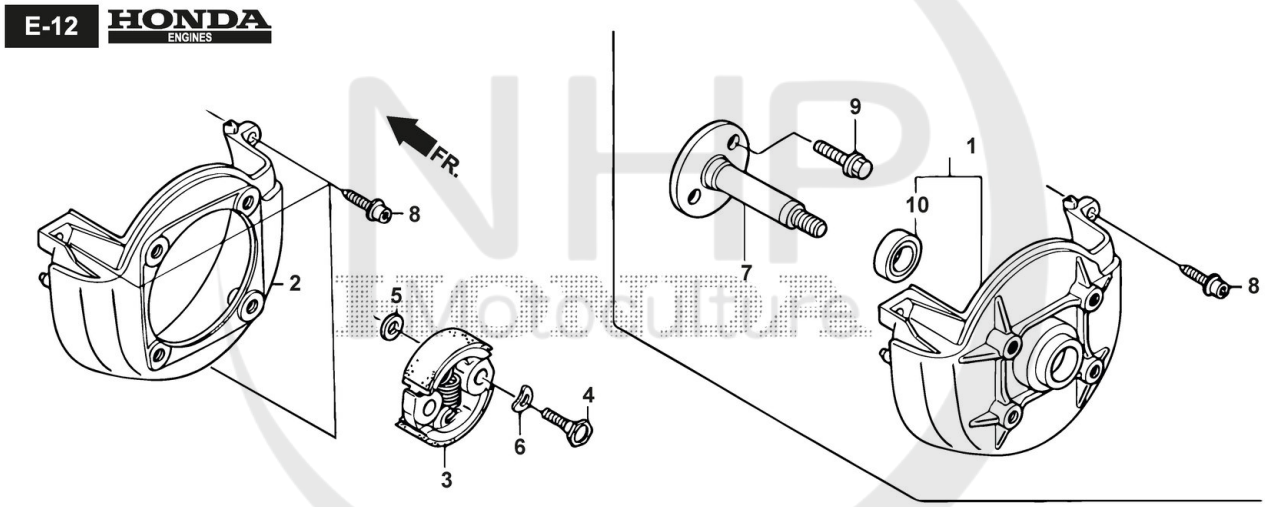

Cultivez votre univers

Copyright ST. S.P.A.

Fan Cover/Clutch

Réf. N°	Q.té :	Code article	Description	Articles	De	Jusqu'à
2	1	118552106/0 cliquez ici	Cover, Fan	Honda: 19611-Z0H-000		
3	1	118552131/0 cliquez ici	Clutch Assy.	Honda: 22000-ZM3-003		
4	2	118552132/0 cliquez ici	Bolt, Clutch (6Mm)	Honda: 22253-Z3E-000		
5	2	118552134/0 cliquez ici	Washer, Clutch (6X15)	Honda: 22254-Z3E-000		
6	2	118552136/0 cliquez ici	Washer, Wave (8Mm)	Honda: 22255-Z3E-000		
8	3	HONDA_SP	Honda Spare Parts	Honda: 90009-Z3E-901 - BOLT, SOCKET, 5X20		

NHP Motoculture
Cultivez votre univers

Copyright ST. S.P.A.

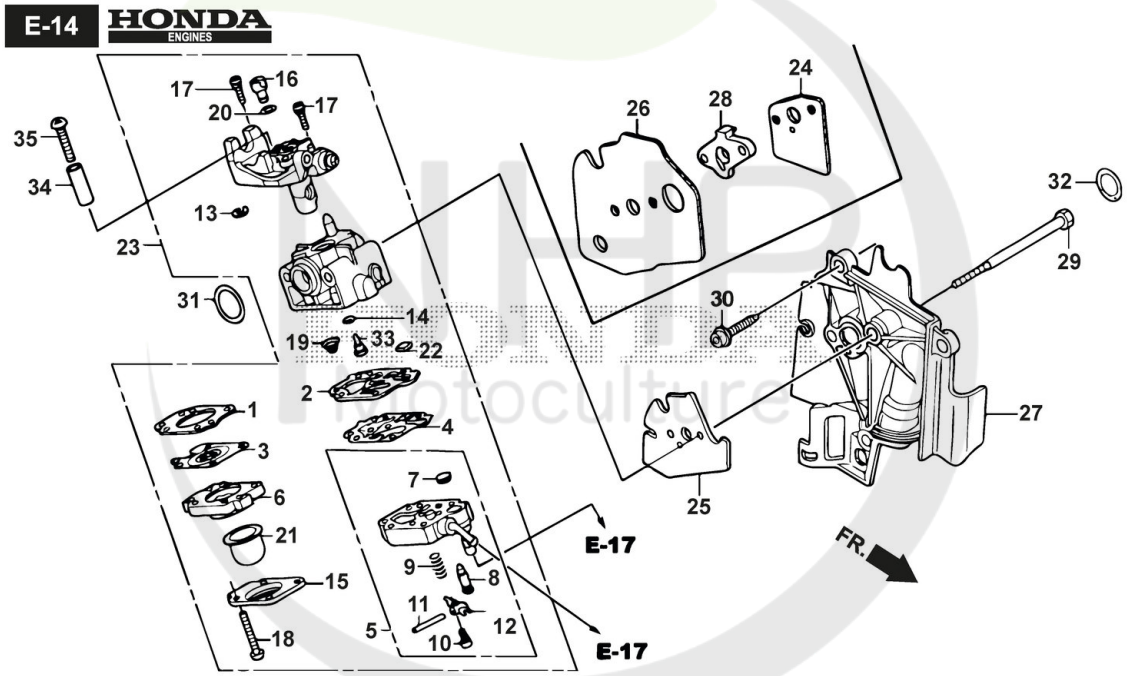

Cultivez votre univers

Copyright ST. S.P.A.

Carburetor

Réf. N°	Q.té :	Code article	Description	Articles	De	Jusqu'à
1	1	HONDA_SP	Honda Spare Parts	Honda: 16010-ZM3-004 - GASKET, METERING DIAPHRAGM		
2	1	HONDA_SP	Honda Spare Parts	Honda: 16011-Z0H-013 - GASKET, PUMP		
3	1	HONDA_SP	Honda Spare Parts	Honda: 16013-Z0H-003 - DIAPHRAGM ASSY., METERING		
4	1	HONDA_SP	Honda Spare Parts	Honda: 16014-ZM3-004 - DIAPHRAGM, PUMP		
5	1	HONDA_SP	Honda Spare Parts	Honda: 16015-Z0H-013 - BODY ASSY., PUMP		
6	1	HONDA_SP	Honda Spare Parts	Honda: 16017-ZM3-004 - BODY ASSY., AIR PURGE		
7	1	HONDA_SP	Honda Spare Parts	Honda: 16018-ZM3-802 - SCREEN, INLET		
8	1	HONDA_SP	Honda Spare Parts	Honda: 16019-ZM3-004 - VALVE, INLET NEEDLE		
9	1	HONDA_SP	Honda Spare Parts	Honda: 16020-ZM3-004 - SPRING, METERING LEVER		
10	1	HONDA_SP	Honda Spare Parts	Honda: 16021-ZM3-004 - SCREW, METERING LEVER PIN		
11	1	HONDA_SP	Honda Spare Parts	Honda: 16022-ZM3-014 - PIN, METERING LEVER		
12	1	HONDA_SP	Honda Spare Parts	Honda: 16023-ZM3-004 - LEVER, METERING		
13	1	HONDA_SP	Honda Spare Parts	Honda: 16024-Z0H-003 - RING, RETAINING		
14	1	HONDA_SP	Honda Spare Parts	Honda: 16025-ZM3-004 - O-RING		
15	1	HONDA_SP	Honda Spare Parts	Honda: 16026-ZM3-004 - COVER, PRIMER PUMP		
16	1	HONDA_SP	Honda Spare Parts	Honda: 16027-ZM3-004 - SWIVEL		
17	2	HONDA_SP	Honda Spare Parts	Honda: 16028-ZM3-004 - SCREW, THROTTLE COLLAR		
18	4	HONDA_SP	Honda Spare Parts	Honda: 16029-ZM3-004 - SCREW, PUMP COVER		
19	1	HONDA_SP	Honda Spare Parts	Honda: 16030-ZM3-004 - SPRING, PUMP		
20	1	HONDA_SP	Honda Spare Parts	Honda: 16031-ZM3-004 - WASHER		
21	1	118551938/0 cliquez ici	Pump, Primer	Honda: 16032-ZM3-004		
22	1	HONDA_SP	Honda Spare Parts	Honda: 16035-ZM3-802 - FILTER, FUEL INLET		
23	1	118551650/0 cliquez ici	Carburetor Assy. (Wyb 6D)	Honda: 16100-Z0H-053		
23	1	118551939/0 cliquez ici	Carburetor Assy. (Wyb 7E/F)	Honda: 16100-Z0H-805		
24	1	HONDA_SP	Honda Spare Parts	Honda: 16221-Z0H-000 - PACKING, CARBURETOR		
25	1	118551952/0 cliquez ici	Packing, Carburetor	Honda: 16221-Z0H-010		
26	2	HONDA_SP	Honda Spare Parts	Honda: 90014-Z0H-003 - BOLT, 5X53		
27	1	118552114/0 cliquez ici	Shroud	Honda: 19631-Z0H-010		
28	1	118552264/0 cliquez ici	O-Ring, 14.8X2.4	Honda: 91301-ZM3-000		
29	2	HONDA_SP	Honda Spare Parts	Honda: 90014-Z0H-003 - BOLT, 5X53		
30	3	HONDA_SP	Honda Spare Parts	Honda: 90018-Z0H-003 - BOLT, SOCKET, 5X16		
31	1	118552264/0 cliquez ici	O-Ring, 14.8X2.4	Honda: 91301-ZM3-000		
32	1	118552267/0 cliquez ici	O-Ring, 12.3X2.4	Honda: 91308-Z3E-000		
33	1	HONDA_SP	Honda Spare Parts	Honda: 99101-Z0H0320 - JET (#32)		
33	1	HONDA_SP	Honda Spare Parts	Honda: 99101-ZM50350 - JET (#35)		
33	1	HONDA_SP	Honda Spare Parts	Honda: 99101-ZM50340 - JET (#34)		

Copyright ST. S.P.A.

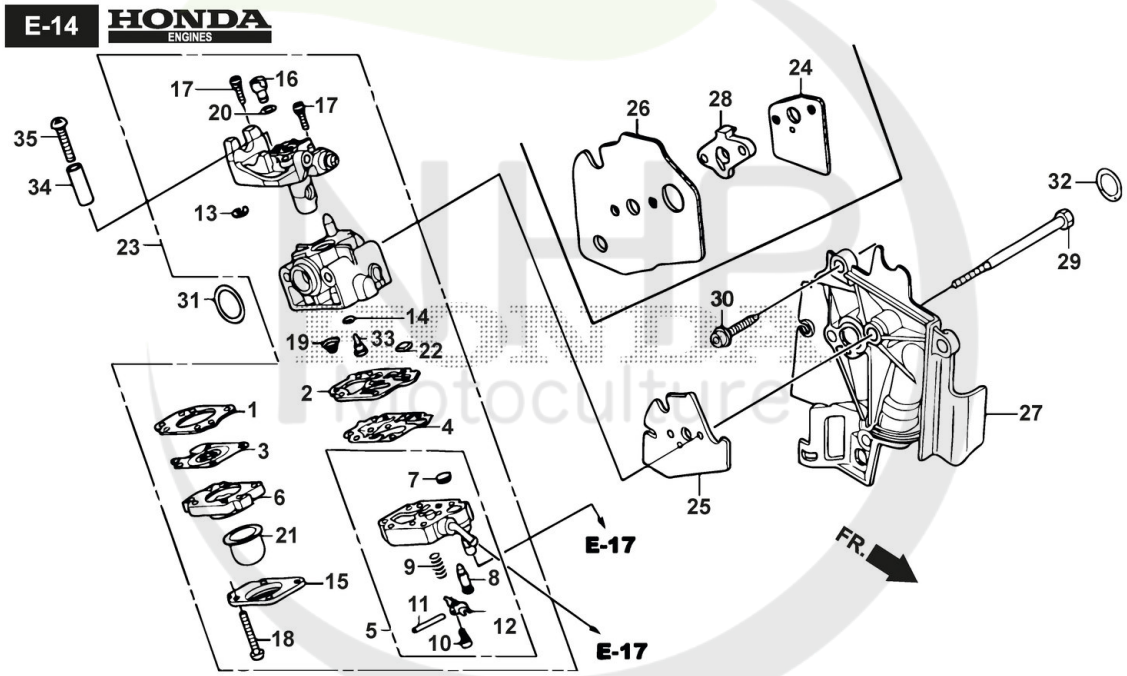

Cultivez votre univers

Copyright ST. S.P.A.

Réf. N°	Q.té :	Code article	Description	Articles	De	Jusqu'à
33	1	HONDA_SP	Honda Spare Parts	Honda: 99101-ZM50330 - JET (#33)		

NHP Motoculture
Cultivez votre univers

Copyright ST. S.P.A.

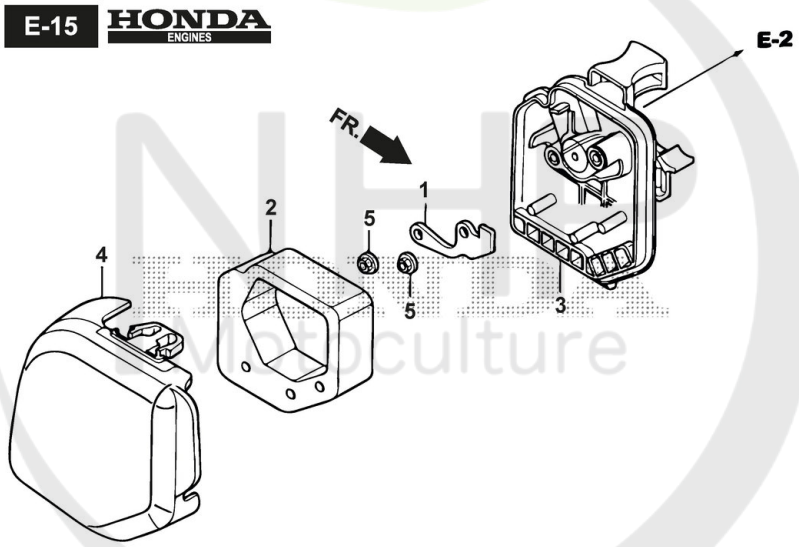

Cultivez votre univers

Copyright ST. S.P.A.

Air Cleaner

Réf. N°	Q.té :	Code article	Description	Articles	De	Jusqu'à
1	1	118552027/0 cliquez ici	Plate, Oil Trap	Honda: 17204-Z0H-000		
2	1	118551669/0 cliquez ici	Element, Air Cleaner	Honda: 17211-Z0H-000		
3	1	118552030/0 cliquez ici	Case Comp., Air Cleaner	Honda: 17220-Z0H-020		
4	1	118551676/0 cliquez ici	Cover, Air Cleaner	Honda: 17231-Z0H-010		
5	2	HONDA_SP	Honda Spare Parts	Honda: 94050-05000 - NUT, FLANGE, 5MM		
7	2	HONDA_SP	Honda Spare Parts	Honda: 91503-ZM3-000 - COLLAR, AIR CLEANER		

NHP Motoculture
Cultivez votre univers

Copyright ST. S.P.A.

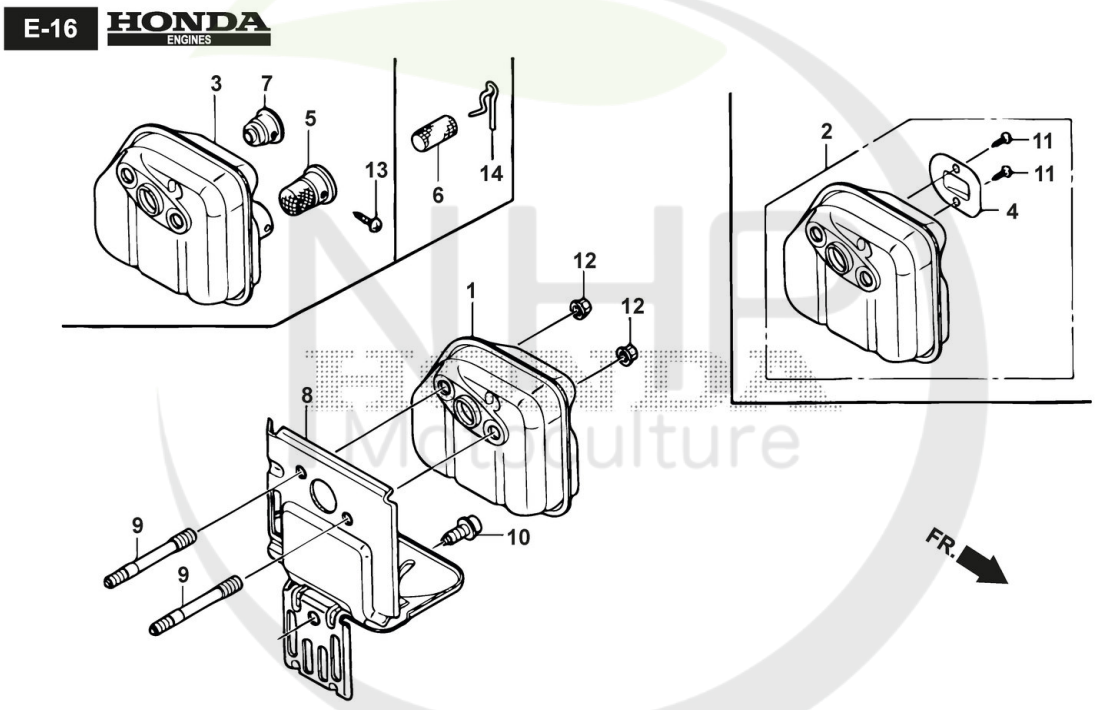

Copyright ST. S.P.A.

Muffler

Réf. N°	Q.té :	Code article	Description	Articles	De	Jusqu'à
1	1	HONDA_SP	Honda Spare Parts	Honda: 18310-Z0H-010 - MUFFLER COMP.		
2	1	118552073/0 cliquez ici	Ens. Silencieux	Honda: 18310-Z0H-801		
4	1	HONDA_SP	Honda Spare Parts	Honda: 18350-Z0H-800 - ARRESTER COMP., SPARK		
5	2	HONDA_SP	Honda Spare Parts	Honda: 90001-Z0H-003 - BOLT, STUD, 5X52		
6	1	HONDA_SP	Honda Spare Parts	Honda: 90011-Z0H-003 - BOLT, SOCKET, 5X10 (CT)		
8	1	118552089/0 cliquez ici	Guide, Air Ex.	Honda: 18515-Z0H-000		
9	2	HONDA_SP	Honda Spare Parts	Honda: 90001-Z0H-003 - BOLT, STUD, 5X52		
10	1	HONDA_SP	Honda Spare Parts	Honda: 90011-Z3E-901 - BOLT, SOCKET, 5X10		
11	2	HONDA_SP	Honda Spare Parts	Honda: 90055-ZE1-000 - SCREW, TAPPING, 4X6		
12	2	HONDA_SP	Honda Spare Parts	Honda: 90136-SM4-901 - NUT, SELF-LOCK, 5MM		

NHP Motoculture
Cultivez votre univers

Copyright ST. S.P.A.

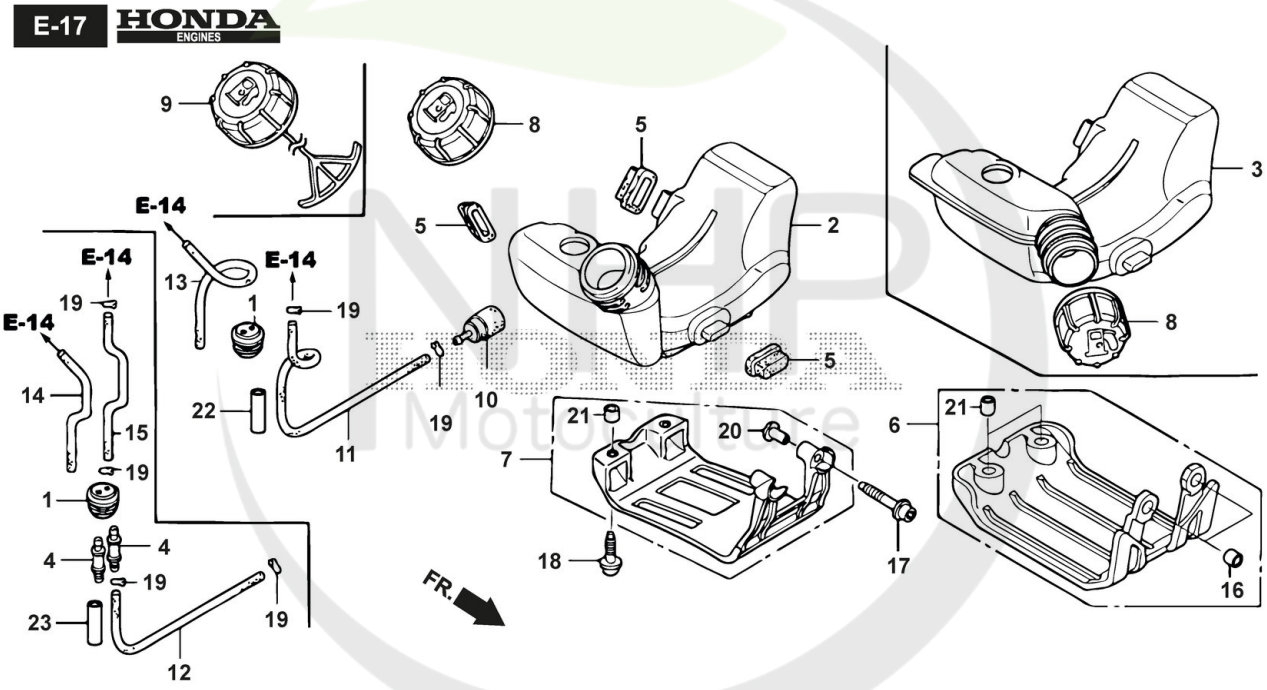

Cultivez votre univers

Copyright ST. S.P.A.

Fuel Tank

Réf. N°	Q.té :	Code article	Description	Articles	De	Jusqu'à
1	1	118552045/0 cliquez ici	Grommet, Fuel Tube	Honda: 17504-ZM3-003		
2	1	118552047/0 cliquez ici	Tank, Fuel	Honda: 17511-Z0H-023		
3	3	118552057/0 cliquez ici	Rubber, Tank Mounting	Honda: 17533-Z0H-000		
4	1	118552061/0 cliquez ici	Guard, Tank	Honda: 17555-Z0H-010		
5	3	118552057/0 cliquez ici	Rubber, Tank Mounting	Honda: 17533-Z0H-000		
6	1	118552066/0 cliquez ici	Filter, Fuel	Honda: 17672-Z0H-003		
7	1	118552061/0 cliquez ici	Guard, Tank	Honda: 17555-Z0H-010		
8	1	HONDA_SP	Honda Spare Parts	Honda: 17620-ZM3-063 - CAP ASSY., FUEL TANK		
9	1	118551683/0 cliquez ici	Cap Assy., Fuel Tank	Honda: 17620-ZM3-818		
10	1	118552066/0 cliquez ici	Filter, Fuel	Honda: 17672-Z0H-003		
12	2	HONDA_SP	Honda Spare Parts	Honda: 91501-Z0H-000 - COLLAR, TANK GUARD		
15	1	118551683/0 cliquez ici	Cap Assy., Fuel Tank	Honda: 17620-ZM3-818		
17	2	HONDA_SP	Honda Spare Parts	Honda: 90010-Z3E-901 - BOLT, SOCKET, 5X30		
18	2	HONDA_SP	Honda Spare Parts	Honda: 90018-Z3E-901 - BOLT, SOCKET, 5X16		
19	2	HONDA_SP	Honda Spare Parts	Honda: 91401-ZM3-003 - CLIP, TUBE		
20	2	HONDA_SP	Honda Spare Parts	Honda: 91501-Z0H-000 - COLLAR, TANK GUARD		
21	2	HONDA_SP	Honda Spare Parts	Honda: 91506-ZM3-000 - COLLAR A, HEAD COVER		
22	1	HONDA_SP	Honda Spare Parts	Honda: 16865-Z6J-000 - PROTECTOR, TUBE		
23	1	118552045/0 cliquez ici	Grommet, Fuel Tube	Honda: 17504-ZM3-003		
24	1	118552054/0 cliquez ici	Fitting	Honda: 17519-ZM5-003		
25	1	HONDA_SP	Honda Spare Parts	Honda: 17701-Z0H-800 - TUBE COMP., FUEL FEED		
26	1	118552071/0 cliquez ici	Tube A, Fuel	Honda: 17703-Z0H-J71		
27	2	HONDA_SP	Honda Spare Parts	Honda: 91401-ZM3-003 - CLIP, TUBE		
32	1	HONDA_SP	Honda Spare Parts	Honda: 17700-Z0H-305 - GROMMET ASSY., FUEL TANK		
36	1	HONDA_SP	Honda Spare Parts	Honda: 17701-Z0H-800 - TUBE COMP., FUEL FEED		
43	1	HONDA_SP	Honda Spare Parts	Honda: 16865-Z6J-010 - PROTECTOR, TUBE		
44	1	118552045/0 cliquez ici	Grommet, Fuel Tube	Honda: 17504-ZM3-003		
45	1	118552054/0 cliquez ici	Fitting	Honda: 17519-ZM5-003		
46	1	118552068/0 cliquez ici	Tube, Fuel Feed	Honda: 17701-Z0H-801		
47	1	118552070/0 cliquez ici	Tube, Fuel Return	Honda: 17702-Z0H-003		
48	1	118552071/0 cliquez ici	Tube A, Fuel	Honda: 17703-Z0H-J71		
50	2	HONDA_SP	Honda Spare Parts	Honda: 91401-Z3E-000 - CLIP, TUBE (B1 5)		
51	2	HONDA_SP	Honda Spare Parts	Honda: 91401-Z3E-000 - CLIP, TUBE (B1 5)		

Copyright ST. S.P.A.

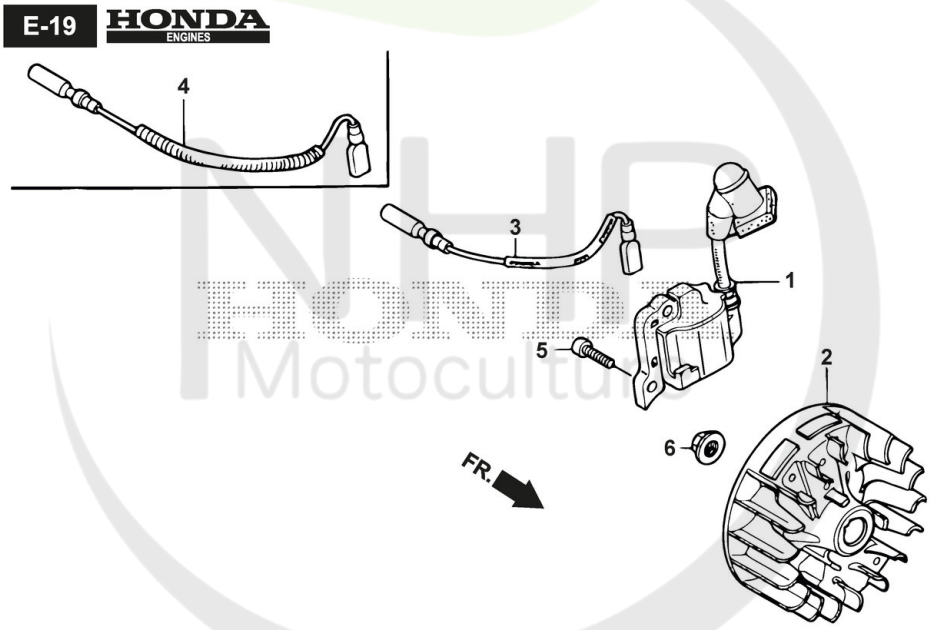

Cultivez votre univers

Copyright ST. S.P.A.

Flywheel

Réf. N°	Q.té :	Code article	Description	Articles	De	Jusqu'à
1	1	118551692/0 cliquez ici	Coil Assy., Ignition	Honda: 30500-Z3E-004		
2	1	118552172/0 cliquez ici	Flywheel Comp.	Honda: 31110-Z3E-004		
3	1	118552193/0 cliquez ici	Cord, Stop Switch	Honda: 32195-Z0H-000		
5	2	HONDA_SP	Honda Spare Parts	Honda: 90012-Z3E-003 - BOLT, SOCKET, 4X14		
6	1	HONDA_SP	Honda Spare Parts	Honda: 90355-427-770 - NUT, FLANGE, 7MM		

NHP Motoculture
Cultivez votre univers

Copyright ST. S.P.A.

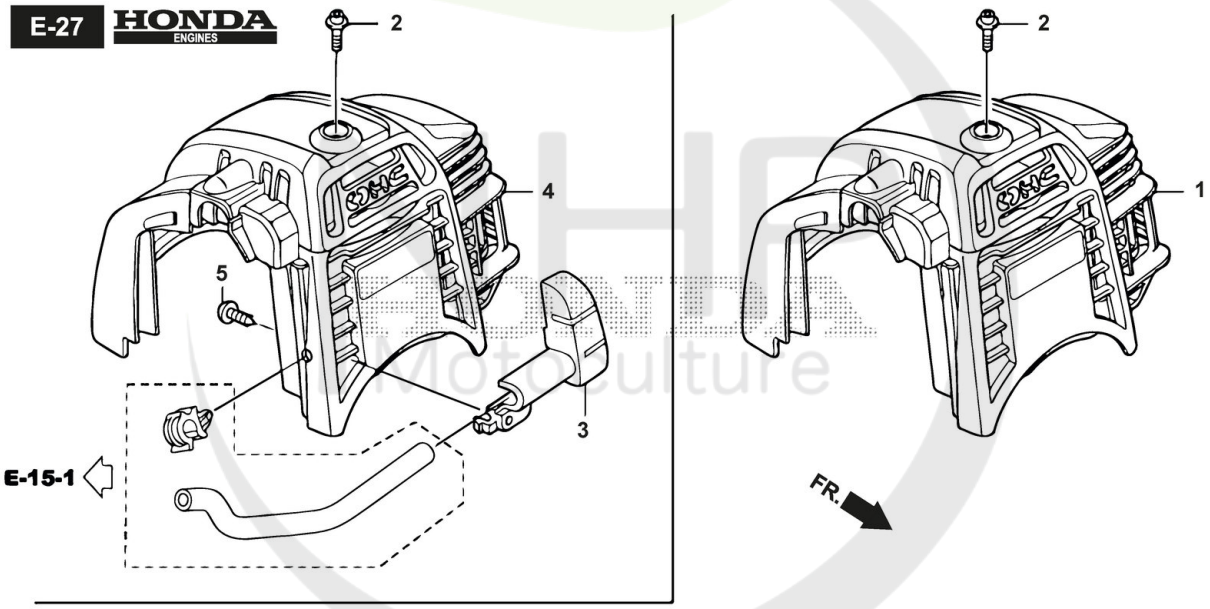

Copyright ST. S.P.A.

Top Cover - GX25

Réf. N°	Q.té :	Code article	Description	Articles	De	Jusqu'à
1	1	118552124/0 cliquez ici	Cover Comp., Red	Honda: 19720-Z0H-010ZB		
1	1	118552125/0 cliquez ici	Cover Comp., Yellow	Honda: 19720-Z0H-010ZC		
2	1	HONDA_SP	Honda Spare Parts	Honda: 90015-Z3E-900 - BOLT, TOP COVER		

NHP Motoculture
Cultivez votre univers

Copyright ST. S.P.A.