Retrouvez cette pièce sur nhp-motoculture.fr en cliquant sur le numéro de référence

STIGA

TRIMMER 4000 (1993)

19-1135-13

Spare parts list
Reservdelar
Repuestos
Ersatzteile
Pièces détachées
Reserve onderdelen
Catalogo ricambi

NHP Motoculture
Cultivez votre univers

● Use ST. S.p.A. Genuine Spare Parts specified in the parts list for repair and/or replacement.
● The contents described in the parts list may change due to improvement.
● The drawings of the spare parts are only indicative And might Not represent the part in question exactly.
● The indications "right" - "left" - "front" - "rear" refer to the position of the operator when using the machine.
● When placing orders of parts for repair And/Or replacement, make sure that the illustrated parts list Is the one applying to the machine's year of manufacture, as shown on the identification plate attached to the machine.

All rights reserved. No part Of this material may be reproduced Or transmitted, in any form Or by any means, electronic Or mechanical, including photocopying, recording Or by any information storage And retrieval system, without permision in writing from ST. S.p.A.

Copyright ST. S.P.A.

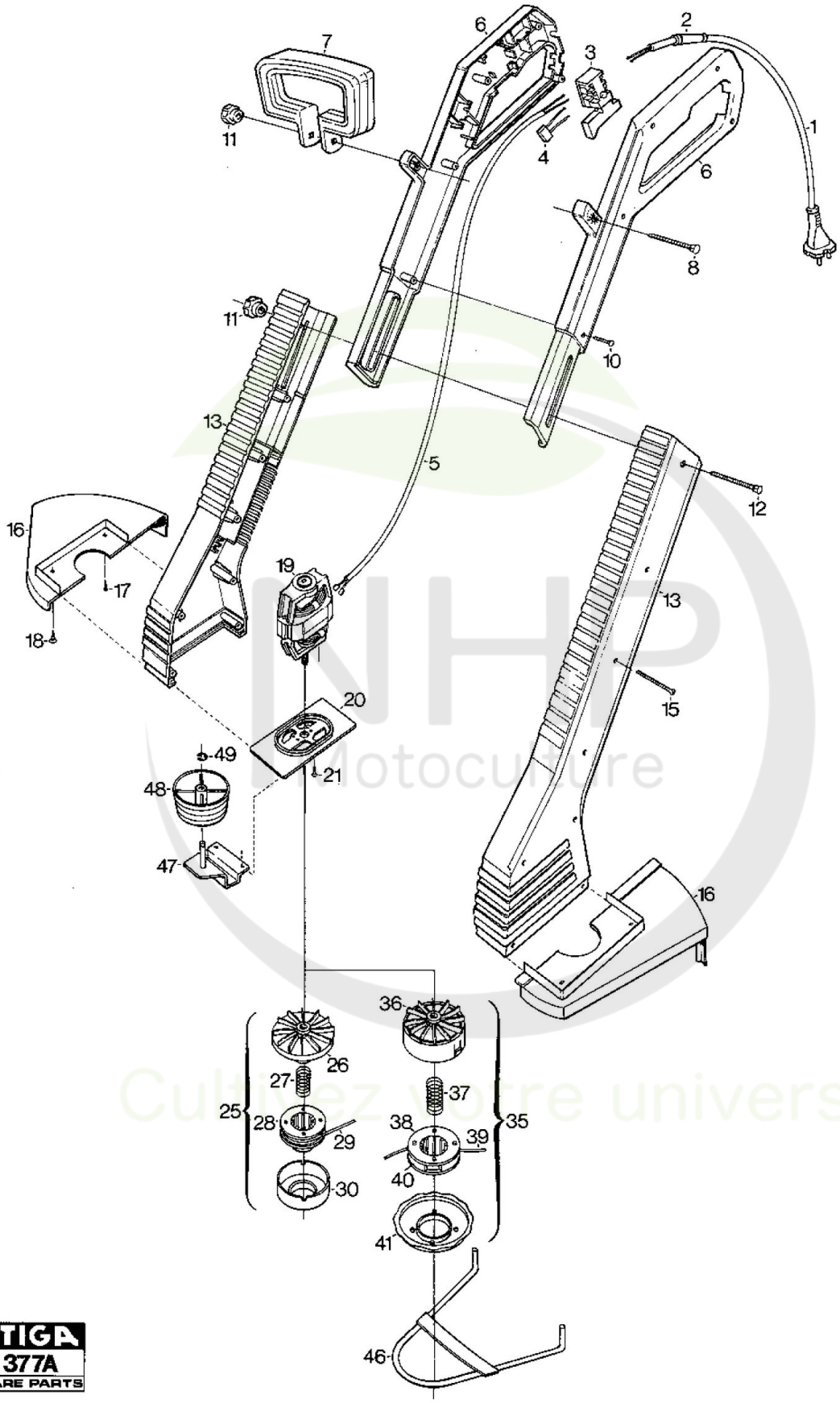

Copyright ST. S.P.A.

Réf. N°	Q.té :	Code article	Description	Articles	De	Jusqu'à
1	1	1911-0704-02 cliquez ici	Connection cable			
2	1	1911-0977-01 cliquez ici	Caoutchouc			
3	1	1911-1001-01 cliquez ici	Interrupteur			
4	1	1911-1012-01 cliquez ici	Condensateur			
5	1	1911-1013-01 cliquez ici	Internal cable			
6	1	1911-0983-01 cliquez ici	Handle housing			
7	1	1911-0980-01 cliquez ici	Helper´s handle			
8	1	1911-0994-01 cliquez ici	Vis			
10	5	1911-0997-01 cliquez ici	Vis			
11	2	1911-0995-01 cliquez ici	Ecrou			
12	1	1911-0998-01 cliquez ici	Vis			
13	1	1911-0982-01 cliquez ici	Carter Moteur			
15	7	1911-0996-01 cliquez ici	Vis			
16	1	1911-1008-01 cliquez ici	Couvercle Protection			
17	4	1911-0822-01 cliquez ici	Vis			
19	1	1911-1004-01 cliquez ici	Motor (not stocked)			
20	1	1911-0984-01 cliquez ici	Plaque Moteur			
21	2	1911-0824-01 cliquez ici	Vis			
25	1	1911-0850-01 cliquez ici	Cutting Head Assy			
26	1	1911-0851-02 cliquez ici	Plaque			
27	1	1911-0852-01 cliquez ici	Ressort			
28	1	1911-9004-01 cliquez ici	Spool w.line			
29	1	1911-9005-04 cliquez ici	Cutting line (1.2 mm)			
29	1	1911-9005-07 cliquez ici	Cutting line (1.2 mm)			
29	1	1911-9005-08 cliquez ici	Cutting line (1.2 mm)			
30	1	1911-0725-02 cliquez ici	Spollock (4 Las)			

Copyright ST. S.P.A.