Retrouvez cette pièce sur nhp-motoculture.fr en cliquant sur le numéro de référence

STIGA

SGM 104 AE (2020)

253010271/ST1



Spare parts list
Reservdelar
Repuestos
Ersatzteile
Pièces détachées
Reserve onderdelen
Catalogo ricambi

NHP Motoculture
Cultivez votre univers

- Use ST. S.p.A. Genuine Spare Parts specified in the parts list for repair and/or replacement.
- The contents described in the parts list may change due to improvement.
- The drawings of the spare parts are only indicative And might Not represent the part in question exactly.
- The indications "right" - "left" - "front" - "rear" refer to the position of the operator when using the machine.
- When placing orders of parts for repair And/Or replacement, make sure that the illustrated parts list Is the one applying to the machine's year of manufacture, as shown on the identification plate attached to the machine.

All rights reserved. No part Of this material may be reproduced Or transmitted, in any form Or by any means, electronic Or mechanical, including photocopying, recording Or by any information storage And retrieval system, without permision in writing from ST. S.p.A.

Copyright ST. S.P.A.

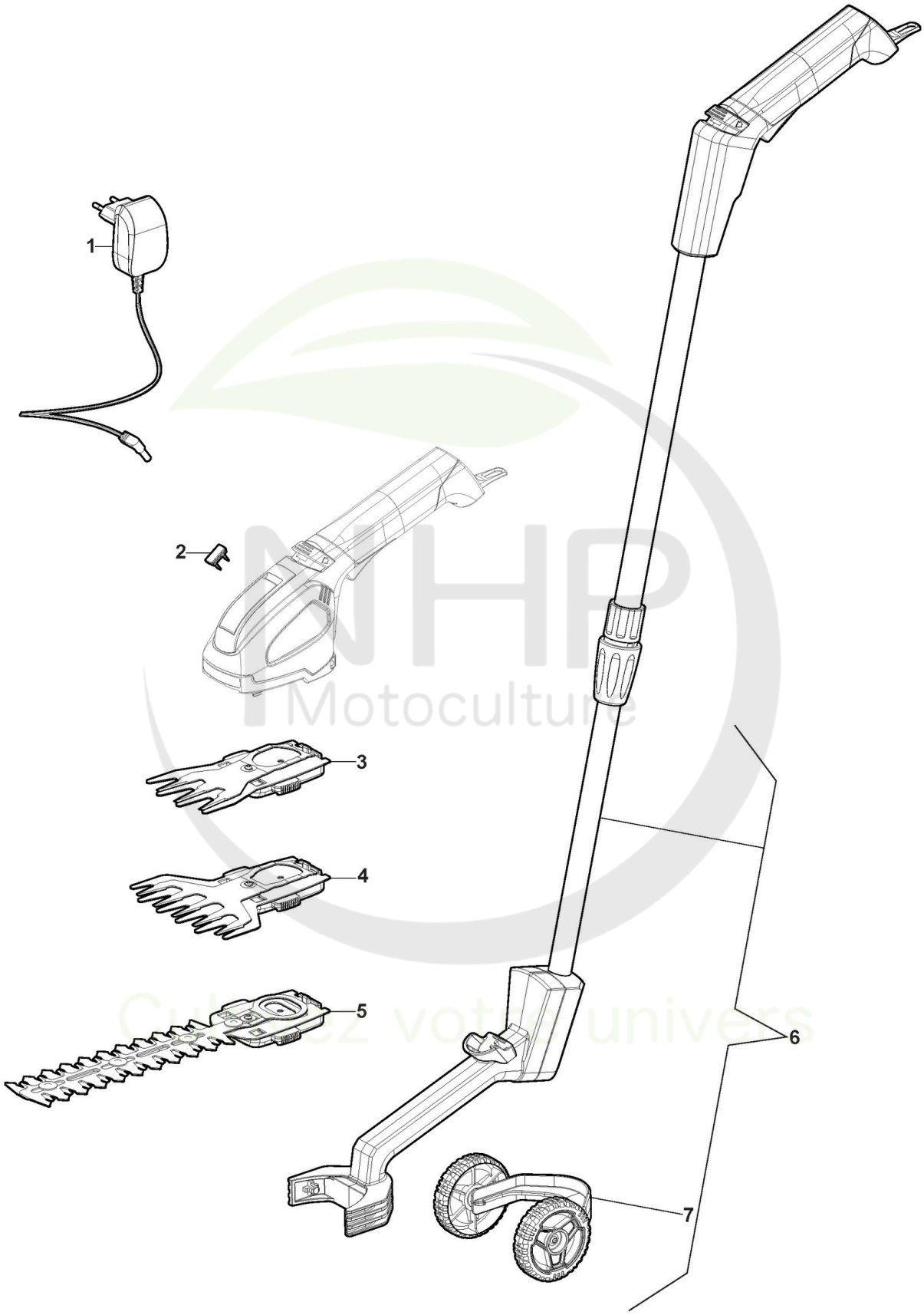

Copyright ST. S.P.A.

Réf. N°	Q.té :	Code article	Description	Articles	De	Jusqu'à
1	1	1800-9010-01 cliquez ici	Chargeur De Batteries 10,8V			
2	1	118810742/0 cliquez ici	Clé de sécurité			
3	1	232522011/ST1	Lame d'herbe 80 mm			
4	1	232522031/ST1	Lame d'herbe 130 mm			
5	1	232522051/ST1	Lame d'arbuste 200mm			
6	1	232521021/ST1	Poignée télescopique			
7	1	118810743/0 cliquez ici	Essieu avec roues			

NHP Motoculture
Cultivez votre univers

Copyright ST. S.P.A.