Retrouvez cette piece sur nhp-motoculture.fr en cliquant sur la reference

Model No. BBX7600 ENGINE BLOWER

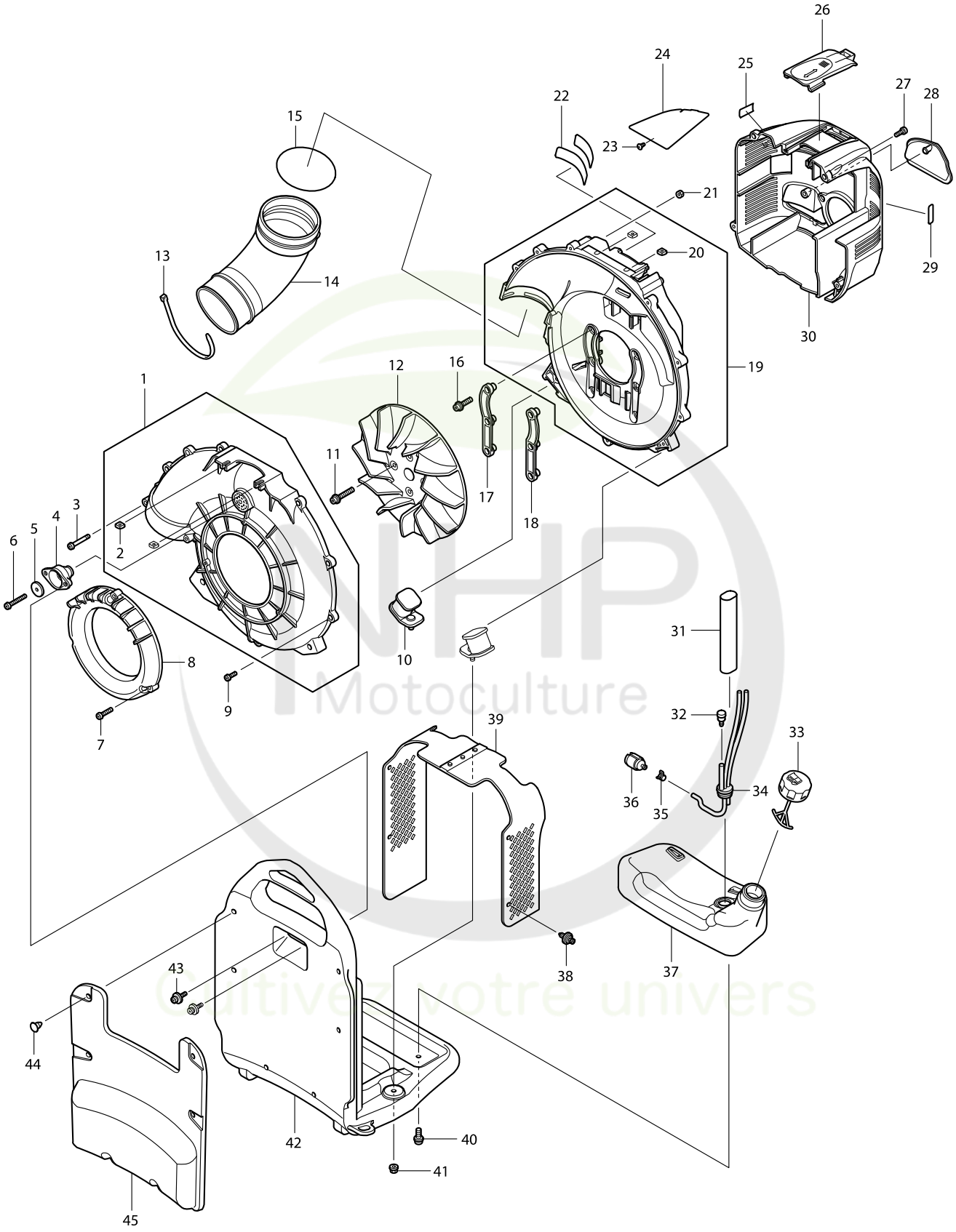

Model No. BBX7600 ENGINE BLOWER

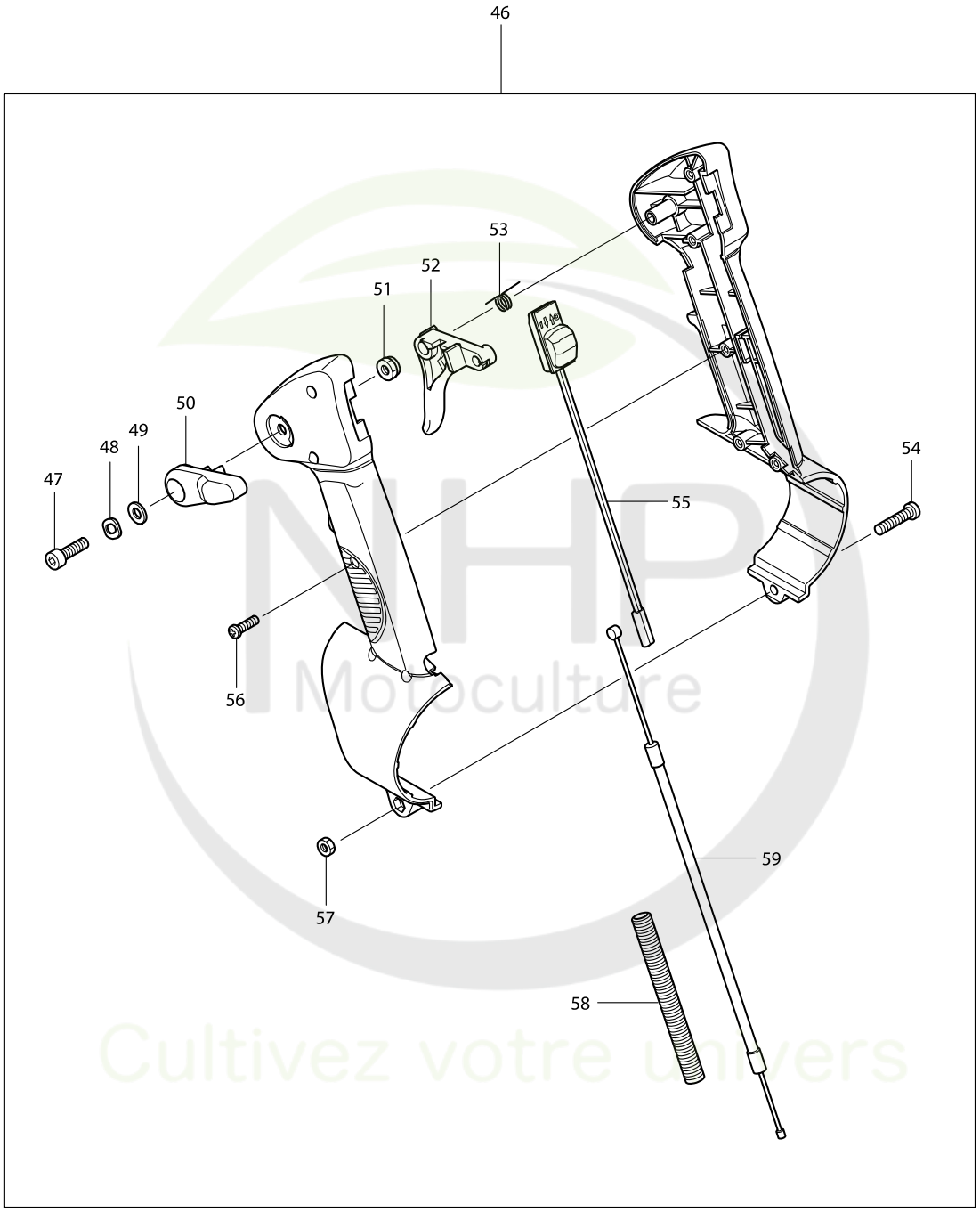

NHP Motoculture
Cultivez votre univers

Model No. BBX7600 ENGINE BLOWER

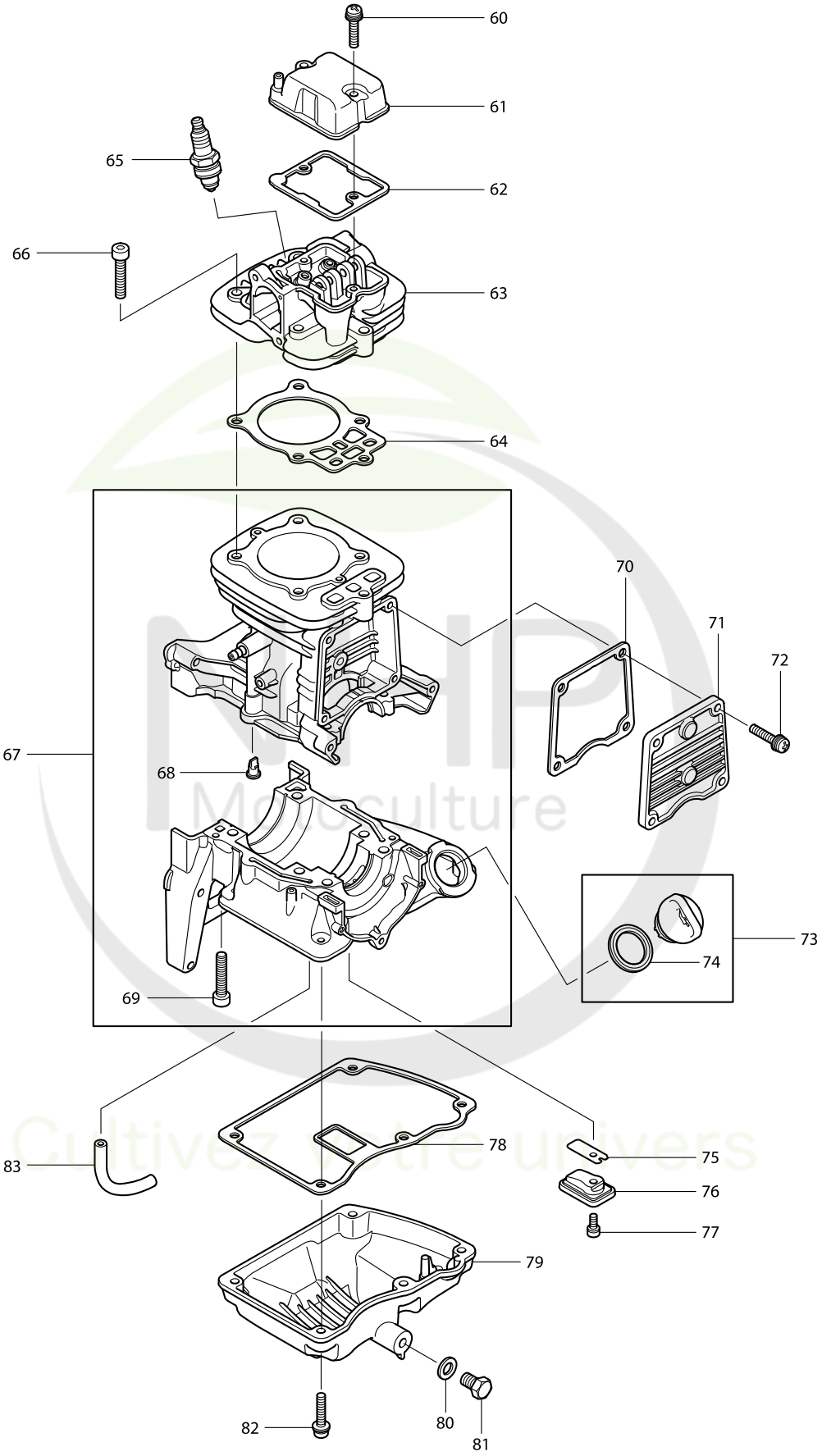

Model No. BBX7600 ENGINE BLOWER

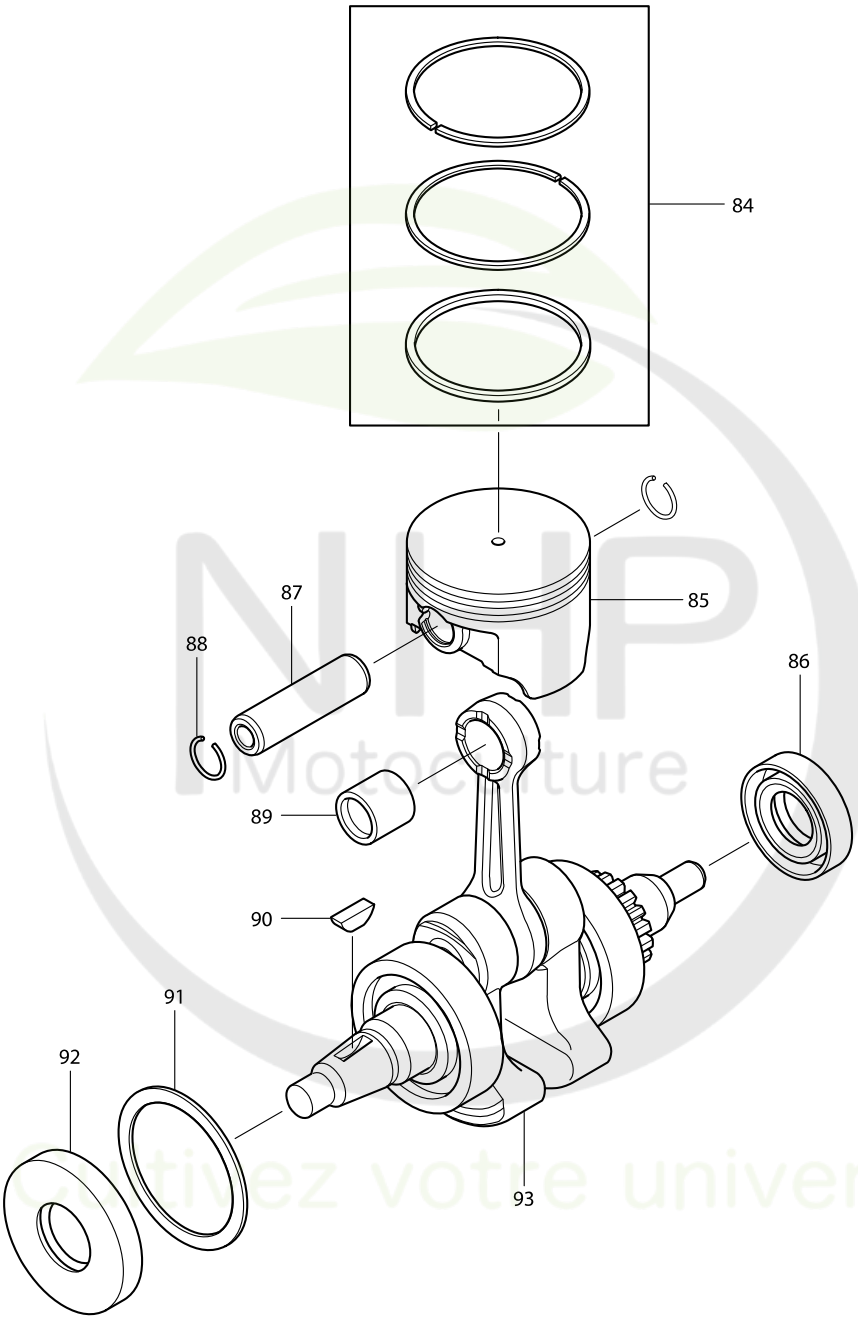

Model No. BBX7600 ENGINE BLOWER

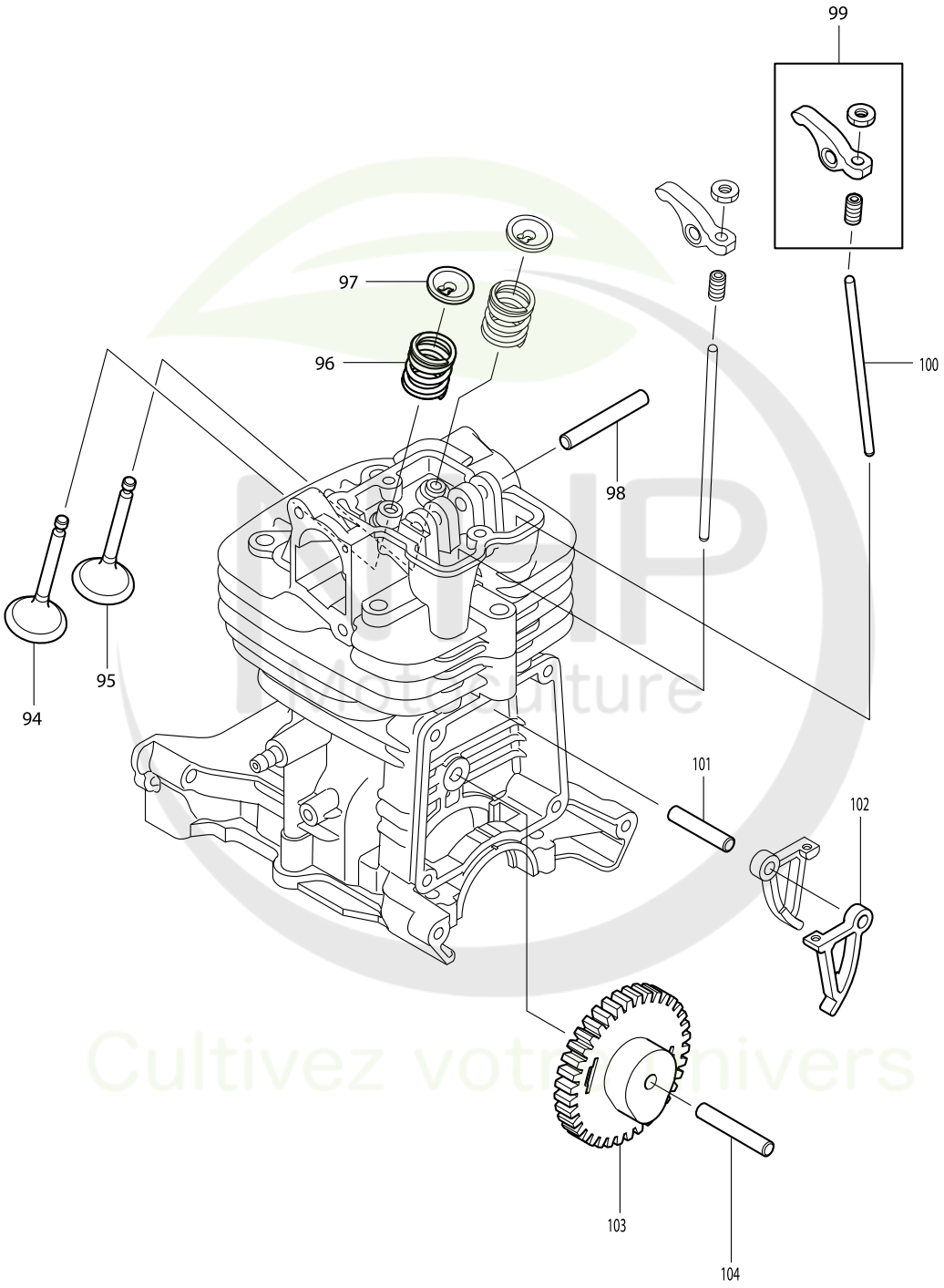

Model No. BBX7600 ENGINE BLOWER

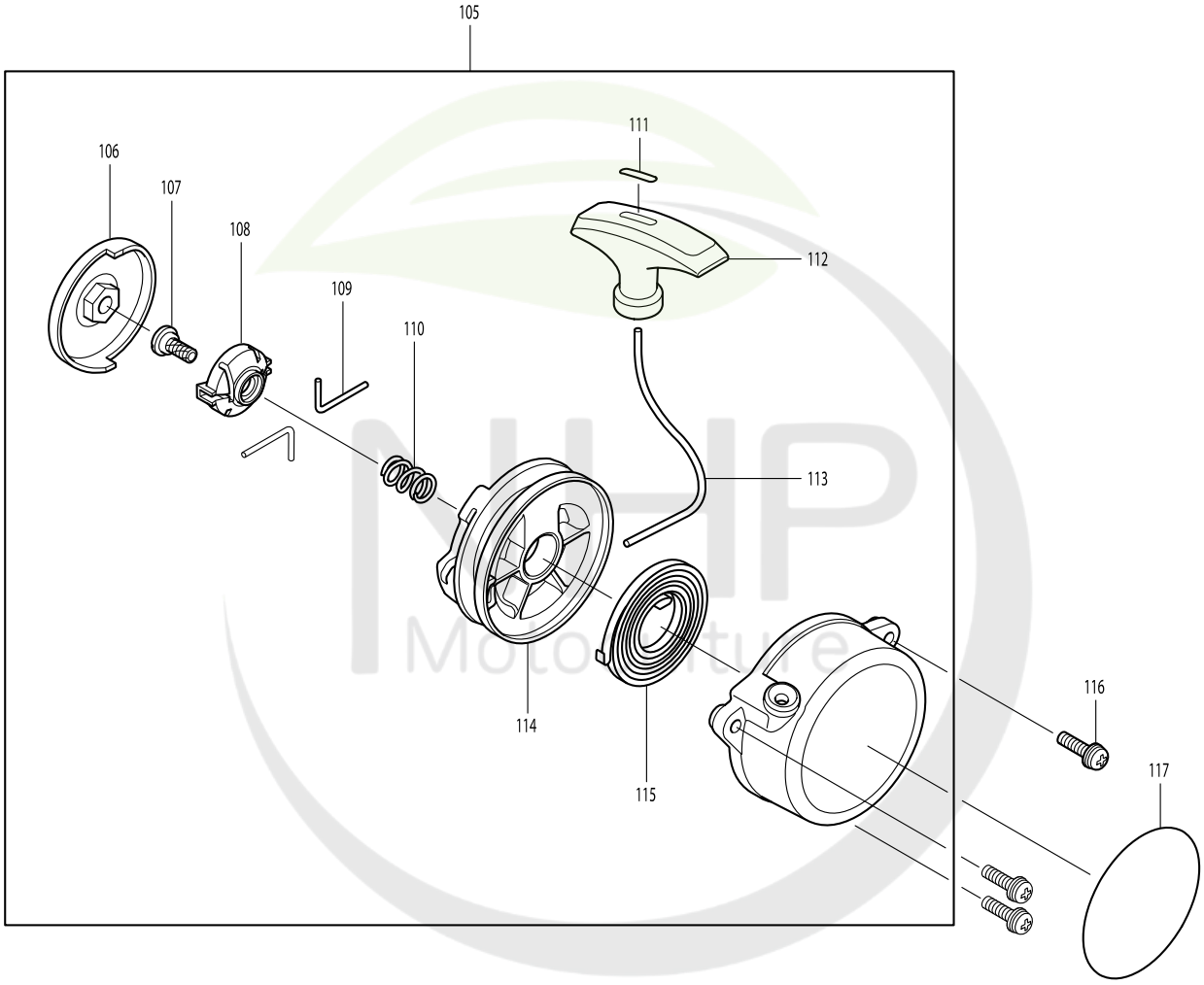

NHP Motoculture
Cultivez votre univers

Model No. BBX7600 ENGINE BLOWER

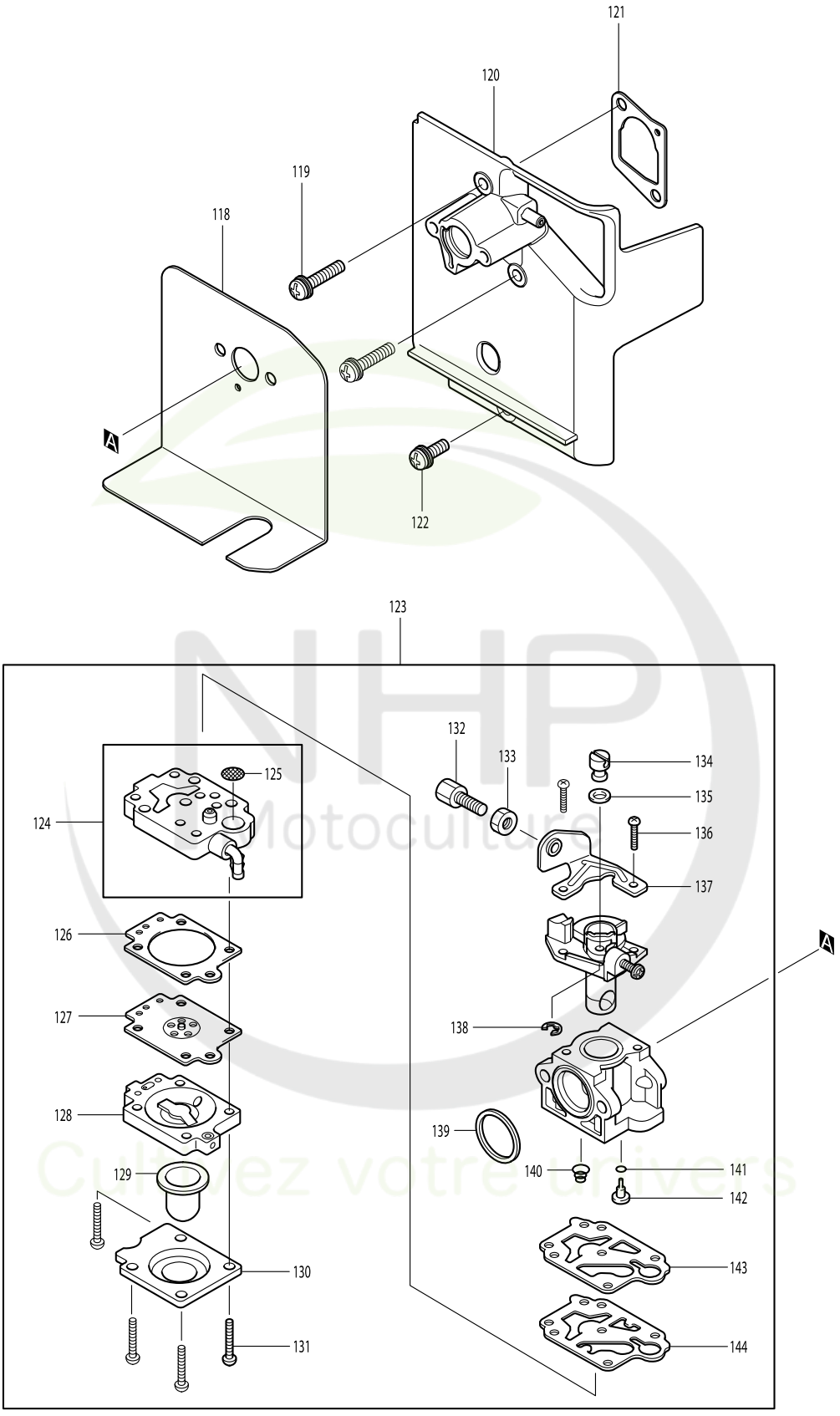

NHP Motoculture
Cultivez votre univers

Model No. BBX7600 ENGINE BLOWER

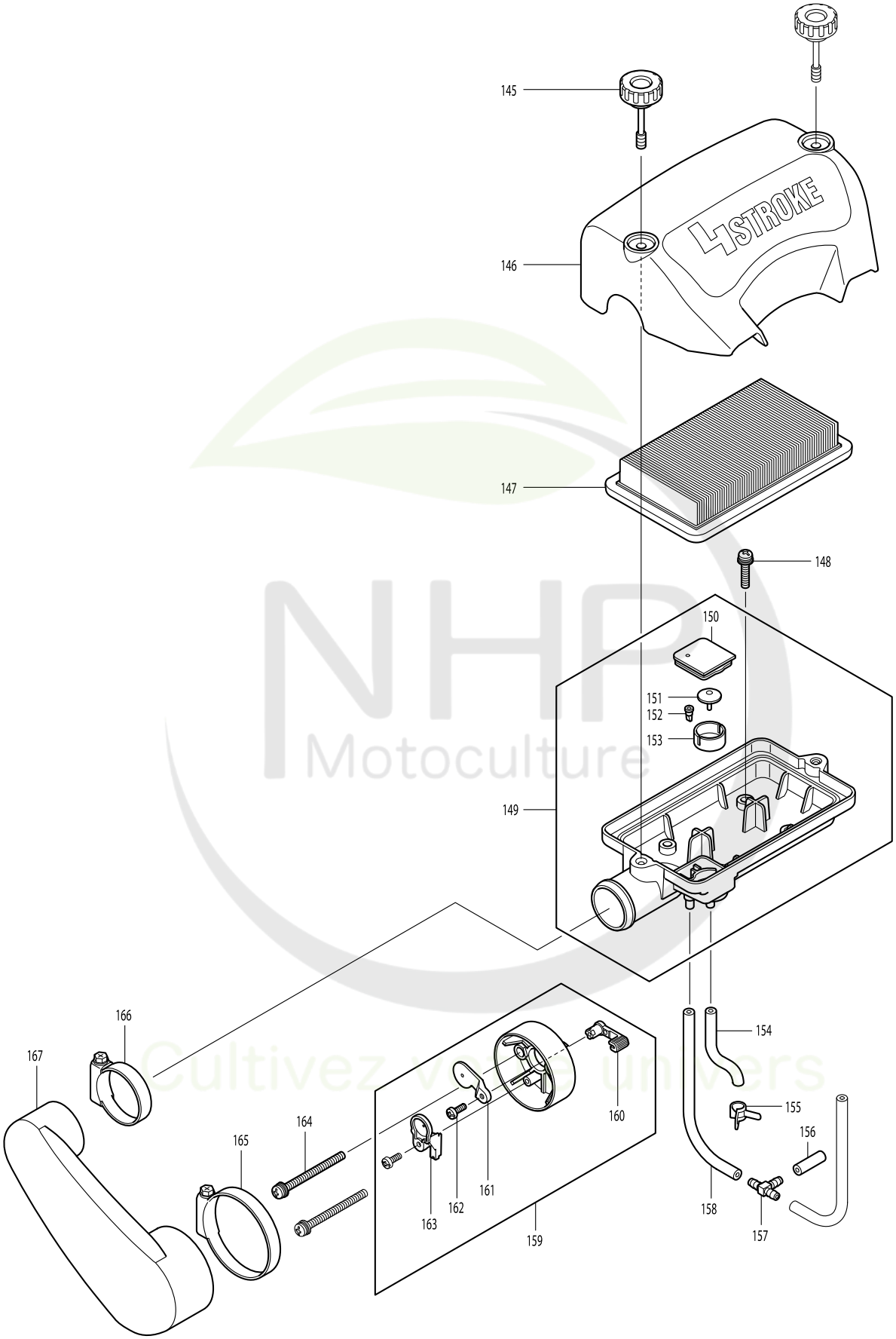

NHP Motoculture
Cultivez votre univers

Model No. BBX7600 ENGINE BLOWER

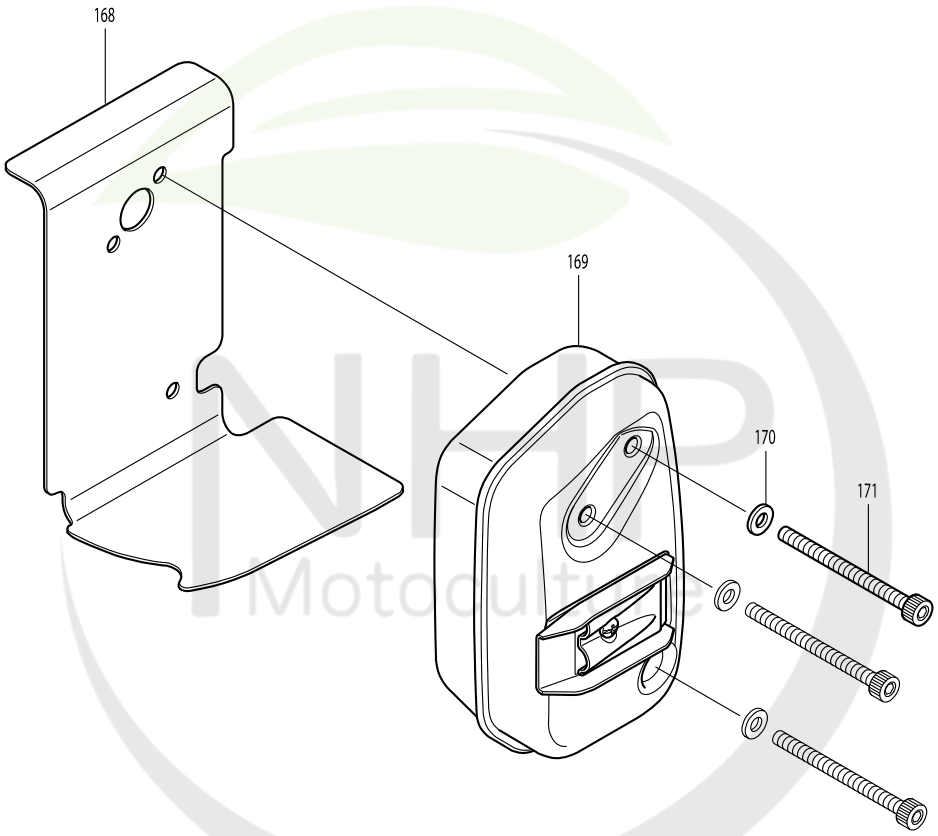

NHP Motoculture
Cultivez votre univers

Model No. BBX7600 ENGINE BLOWER

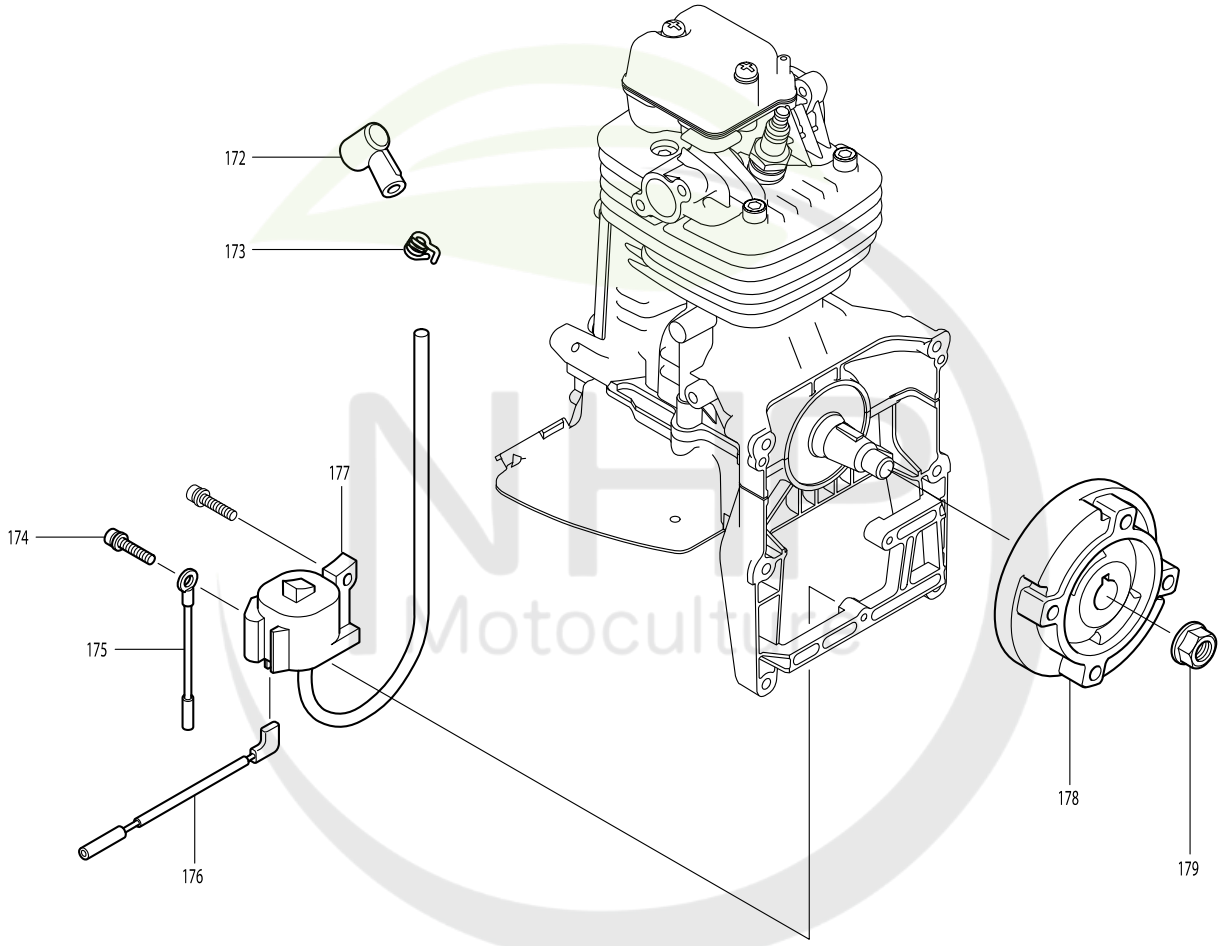

Cultivez votre univers

Model No. BBX7600 ENGINE BLOWER

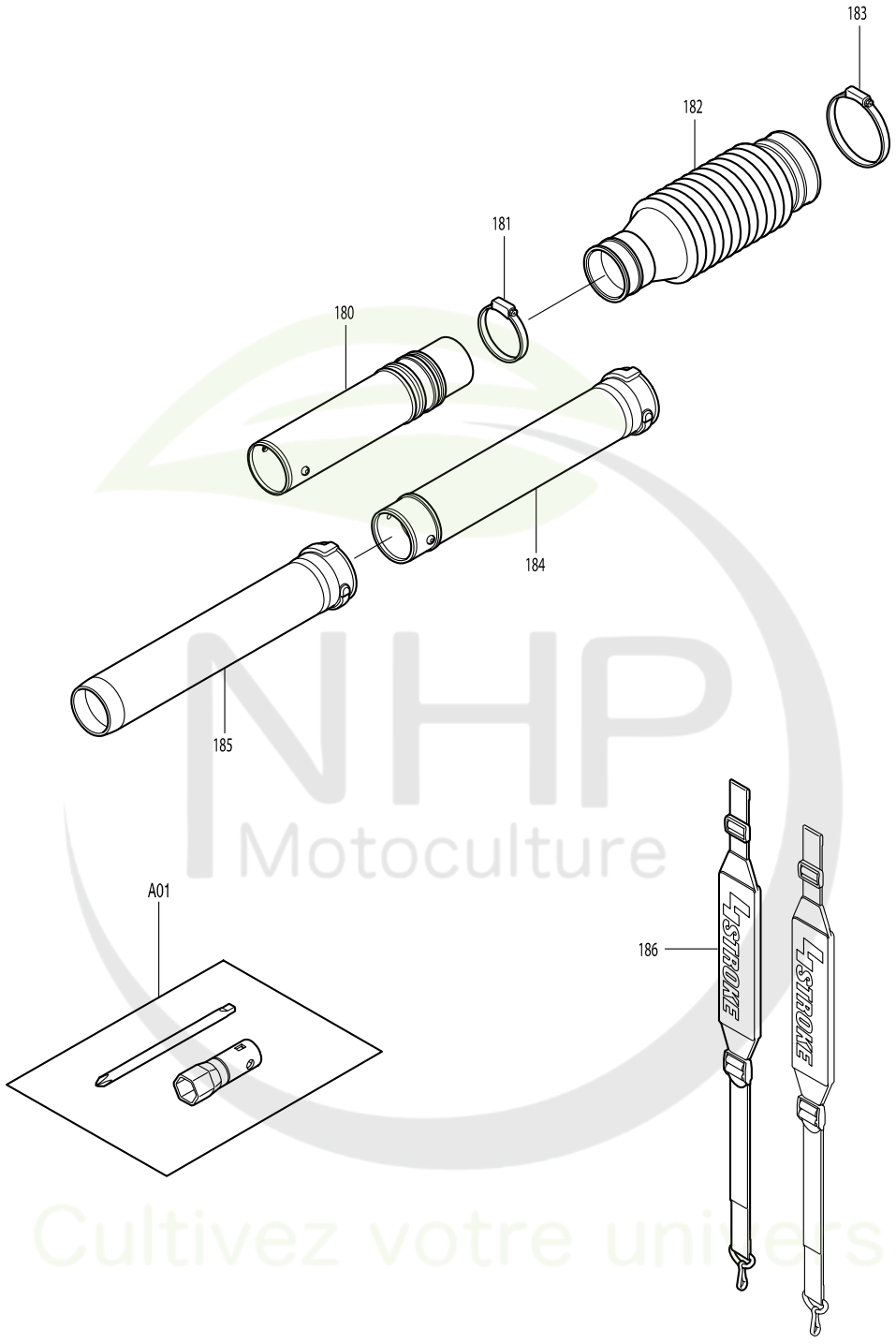

NHP Motoculture
Cultivez votre univers

Model No. BBX7600 ENGINE BLOWER

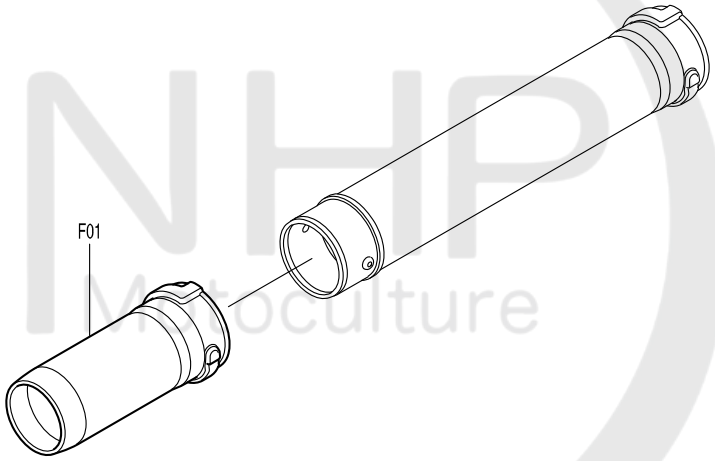

NHP Motoculture
Cultivez votre univers

Model No. BBX7600 ENGINE BLOWER

Item	Parts No.	Description	I/C	Qty	N/O	Opt. 1	Opt. 2	Note
001-1	6671007001	VOLUTE CASE 1 ASSY		1				
D10		INC.2						
002	6671005010	SQUARE NUT		2	*			
002-1	6671005011	SQUARE NUT	O	2				
003	0140059220	SCREW ASSY M5X65 (W.SW)		2				
004	6671002000	DAMPER 1 COMPL		1				
005	0200059910	WASHER M5		1				
006	0043105400	PAN HEAD SCREW M5X40		1				
007	0150059730	TAPPING SCREW 5X25		3				
008	6671001000	INLET COVER COMPL		1				
009-1	0150059800	TAPPING SCREW M5X18		9				
010	6671003000	DAMPER 2 COMPL		2				
011	0119069690	SOCKET HEAD BOLT M6X40 (W.SW)		4	*			
011-1	0119069691	SOCKET HEAD BOLT M6X40 (W.SW)	<	4				
012-1	240138-1	IMPELLER		1				
013	0563379990	WIRE BAND		1				
014	6671500400	ELBOW		1				
015	0240989990	O RING		1	*			
015-1	213645-7	O RING 93	O	1				
016-1	266649-8	SOCKET HEAD BOLT M6X30		6				
017	6671500200	BASE 1		1	*			
017-1	318890-0	BASE L	O	1				
018	6671500300	BASE 2		1	*			
018-1	318891-8	BASE R	O	1				
019-2	6671008002	CASE 2 VOLUTE ASSY		1	*			
D10		INC.20			*			
019-3	6671008003	CASE 2 VOLUTE ASSY	O	1				
D10		INC.20						
020	6671005010	SQUARE NUT		2	*			
020-1	6671005011	SQUARE NUT	O	2				
021	0170059950	NUT M5		2	*			
021-1	931202-6	HEX. NUT M5	O	2				
022-1	892460-8	CAUTION LABEL		1				
025	0736309870	LABEL		1	*			
025-1	898343-0	CAUTION LABEL	O	1				
026-1	450964-2	PLUG COVER		1				
027-1	0150059800	TAPPING SCREW M5X18		4				
028	6676500100	OIL GUARD		1	*			
028-1	424504-2	OIL GUARD	O	1				
029-1	898454-1	CHOKE LABEL		1				
030-4	453712-8	ENGINE COVER		1	*			
030-5	141521-4	ENGINE COVER COMPLETE	<	1				
D10		INC.25,190-192			*			
D11		INC.25,190-192,206						
031-1	412119-7	TUBE GUARD 20-160		1				
032-1	168396-6	BREATHER		1				
033-1	125472-9	FUEL TANK CAP ASSEMBLY		1				
034	0851339960	TUBE		1				

Model No. BBX7600 ENGINE BLOWER

Item	Parts No.	Description	I/C	Qty	N/O	Opt. 1	Opt. 2	Note
035-1	345920-4	HOSE CLAMP		1				
036	5806502900	FILTER		1	*			
036-1	163532-9	FILTER	O	1				
037-1	453618-0	FUEL TANK		1				
038	6672500300	ROCK RIVET		4				
039	6672002000	GUARD COMPL		1				
040	0043706120	SCREW ASSY M6X12 (W.SW)		2				
041	0023706000	FLANGE NUT M6		2	*			
041-1	264092-5	FLANGE NUT M6	O	2				
042	6672001000	FRAME COMPL		1				
043	0140059210	SCREW ASSY M5X16 (W.SW)		2				
044	6672500200	ROCK RIVET		6				
045-1	6672003000	CUSHION COMPLETE		1				
046-1	6675001002	CONTROL LEVER ASSY		1	*			
D10		INC.47-59			*			
046-2	126137-6	CONTROL LEVER ASSEMBLY	O	1	*			
D10		INC.47-59			*			
046-3	197095-3	CONTROL LEVER SET	O	1				
D10		INC.47-59						
047	6675001010	SOCKET HEAD BOLT M6X20		1	*			
047-1	922317-0	HEX. SOCKET HEAD BOLT M6X14	O	1				
048	0032206000	WAVE WASHER		1	*			
048-1	267841-9	WAVE WASHER 7	O	1				
049	0031106000	WASHER		1	*			
049-1	267459-6	FLAT WASHER 7	O	1				
050	6625500701	THROTTLE LEVER 2		1	*			
050-1	453717-8	LEVER 2 THROTTLE	O	1				
051	0170069960	NUT		1	*			
051-1	931302-2	HEX. NUT M6	O	1				
052	6625500601	THROTTLE LEVER 1		1	*			
052-1	453716-0	LEVER 1 THROTTLE	O	1				
053	6625500901	TORSION SPRING		1	*			
053-1	233602-9	TORSION SPRING 9	O	1				
054	6675001030	SCREW M5X25		1	*			
054-1	911242-0	PAN HEAD SCREW M5X25	O	1				
055	6675004000	SWITCH COMPL		1	*			
055-1	168745-7	SWITCH COMPLETE	O	1				
056	6675001020	TAPPING SCREW 4X16		5	*			
056-1	266768-0	TAPPING SCREW 4X16	O	5				
057	0170059950	NUT M5		1	*			
057-1	931202-6	HEX. NUT M5	O	1	*			
057-2	252103-8	HEX. LOCK NUT M5-8	X	1				
058	6675500001	CABLE TUBE		1	*			
058-1	453715-2	TUBE CABLE	O	1				
059	0630139820	CONTROL CABLE		1	*			
059-1	168744-9	CONTROL CABLE	O	1				
060-2	266789-2	H.S.H.BOLT M5X30 WITH WR		2	*			
060-3	922253-0	H.S.H.BOLT M5X30 WITH WR	O	2				

Model No. BBX7600 ENGINE BLOWER

Item	Parts No.	Description	I/C	Qty	N/O	Opt. 1	Opt. 2	Note
061-2	141771-1	ROCKER COVER COMPLETE		1				
062-1	5971500900	ROCKER COVER GASKET		1				
063-1	5971003002	CYLINDER HEAD COMPL		1	*			
D10		INC. 98,99			*			
063-2	142381-7	CYLINDER HEAD COMPLETE	<	1	*			
D10		INC. 98,99			*			
063-3	142771-4	CYLINDER HEAD COMPLETE	<	1				
C10	313283-6	VALVE GUIDE		2				
C20	424424-0	VALVE STEM SEAL		1				
D10		INC. 98,99						
064-2	442167-2	CYLINDER HEAD GASKET		1				
065-1	168401-9	SPARK PLUG		1				
066	0119069670	SOCKET HEAD BOLT M6X35		5	*			
066-1	922357-8	HEX. SOCKET HEAD BOLT M6X35	O	5				
067-1	5971007001	CYLINDER BLOCK SET		1				
D10		INC.68,69						
068-1	424201-0	CHECK VALVE		2				
069	0119069930	HEX. SOCKET HEAD BOLT M6X30		6	*			
069-1	922352-8	HEX. SOCKET HEAD BOLT M6X30	O	6				
070-2	442168-0	CAM GEAR GASKET		1				
071-1	318725-5	CAM GEAR COVER		1				
072-2	266813-1	H.S.H.BOLT M5X16 WITH WR		4				
073	6676005000	OIL CAP ASSY		1				
D10		INC.74						
074	0213229980	GASKET		1				
075-1	346083-9	LEAD VALVE		1				
076	5931501300	RETAINER PLATE		1				
077	0119049980	SOCKET HEAD BOLT M4X10		1				
078	5976500100	OIL CASE GASKET		1				
079	5976500000	OIL CASE		1	*			
079-1	319008-6	OIL CASE	O	1				
080	0037008000	ALUMINUM GASKET		1	*			
080-1	346452-4	GASKET	O	1				
081	0016608120	BOLT M8X12		1	*			
081-1	266916-1	HEX. BOLT M8X12	O	1				
082-1	0119059390	SOCKET HEAD BOLT M5X25		5	*			
082-2	922243-3	HEX. SOCKET HEAD BOLT M5X25	O	5				
083	0851109960	TUBE		1				
084	5972003000	PISTON RING SET		1				
085-2	318726-3	PISTON		1				
086-1	213599-8	OIL SEAL 17		1	*			
086-2	213599-8	OIL SEAL 17	O	1				
087-1	5802500702	PISTON PIN		1	*			
087-2	257344-1	PISTON PIN	O	1				
088-1	233995-4	RING SPRING 12		2				
089	0610129940	NEEDLE ROLLER BEARING		1				
090	0323049950	WOODRUFF KEY		1				
091-1	267448-1	FLAT WASHER 41		1				

NHP Motoculture

Model No. BBX7600 ENGINE BLOWER

Item	Parts No.	Description	I/C	Qty	N/O	Opt. 1	Opt. 2	Note
092-1	213598-0	OIL SEAL(L)		1				
093-1	5972002002	CRANKSHAFT COMPL		1	*			
093-2	142205-7	CRANK SHAFT COMPLETE	O	1	*			
093-3	126576-0	CRANK SHAFT ASSEMBLY	O	1				
094-1	331964-0	INTAKE VALVE		1				
095-3	331965-8	EXHAUST VALVE		1				
096-1	234212-5	COMPRESSION SPRING 11		2				
097-1	331966-6	RETAINER		2				
098-1	5973500501	SHAFT ROCKER ARM		1	*			
098-2	268310-3	PIN 5	O	1	*			
099-2	126005-3	ROCKER ARM ASSEMBLY		2	*			
100-1	256526-2	PUSH ROD		2				
101	5973500700	SHAFT CAM LIFTER		1	*			
101-1	256186-0	PIN 5	O	1				
102-1	5973500601	CAM LIFTER		1	*			
102-2	313266-6	CAM LIFTER L	<	1				
103-1	5973002002	CAMGEAR ASSY		1				
C10	5973003002	CAMGEAR COMPL		1				
C20	5973501600	SPRING		1				
C30	5973501400	FLY WEIGHT		1				
C40	346434-6	CAM GEAR PLATE		1				
104-1	256200-2	PIN 5		1				
105	5975001000	STARTER REWIND		1				
D10		INC.106-115						
106	5975500000	PULLEY		1				
107-1	266585-8	TAPPING SCREW 5X12		1				
108-1	424516-5	COLLAR		1				
109-1	326200-7	SWING ARM		2				
110-1	234257-3	FRICTION SPRING		1				
111-1	424360-0	ROPE STOPPER		1				
112-1	424361-8	STARTER KNOB		1				
113	5975002110	STARTER ROPE		1	*			
113-1	444043-6	STARTER ROPE	O	1				
114-1	441075-4	REEL		1				
115-1	232262-4	SPIRAL SPRING		1				
116-1	266788-4	PAN HEAD SCREW M5X20 WITH WR		3				
117	6679500702	MODEL LABEL		1	*			
117-1	6679500703	MODEL LABEL	O	1				
118	5973501200	CARBURETOR GASKET		1				
119-3	266749-4	HEX. S.H.B. M5X25 WITH WR		2				
120	5973009001	INSULATOR COMPL		1	*			
120-1	453858-0	INSULATOR	O	1				
121-1	162333-2	INSULATOR GASKET		1				
122-1	0119059490	SOCKET HEAD BOLT M5X14 (W,SW)		1				
123	5976001000	CARBURETOR		1				
D10		INC.124,126-144						
124-1	5976001010	PUMP BODY ASSY		1				
D10		INC.125						

Model No. BBX7600 ENGINE BLOWER

Item	Parts No.	Description	I/C	Qty	N/O	Opt. 1	Opt. 2	Note
125-1	352010-6	INLET SCREEN		1				
126-1	442154-1	METERING DIAPHRAGM GASKET		1				
127-1	168574-8	METERING DIAPHRAGM		1				
128-1	140438-8	AIR PURGE BODY		1				
129-1	424314-7	PRIMER PUMP		1				
130-1	346270-0	PRIMER PUMP COVER		1				
131-1	266582-4	TAPPING SCREW 3X24		4				
132-1	266795-7	ADJUST SCREW		1				
133-1	264065-8	CABLE ADJUST NUT M6		1				
134-1	325922-6	SWIVEL		1				
135-1	413140-9	WASHER		1				
136-1	266704-6	PAN HEAD SCREW M3X10		2				
137-1	346491-4	BRACKET CABLE		1				
138-1	257964-1	STOP RING E-3		1				
139-1	424444-4	PACKING RING		1				
140-1	234183-6	CONICAL COMPRESSION SPRING 5-9		1				
141-1	213538-8	O RING 2		1				
142	5976001020	JET #60		1	*			
142-1	WJ00112478	MAIN JET	O	1				
143-1	442155-9	PUMP GASKET		1				
144-1	168575-6	PUMP DIAPHRAGM		1				
145	6676501200	KNOB BOLT M5X45		2				
146-1	6676002002	AIR CLEANER COVER		1				
147-1	6676500201	AIR CLEANER ELEMENT		1				
148-1	266494-1	+ PAN HEAD SCREW M5X16		4				
149-2	6676003002	AIR CLEANER CASE ASSY		1	*			
D10		INC.150-153			*			
149-3	126377-6	AIR CLEANER CASE ASSEMBLY	<	1				
D10		INC.150-153						
150-1	6676501300	SEPARATOR PLATE		1	*			
150-2	162358-6	SEPARATOR PLATE	<	1				
151-1	424315-5	CHECK VALVE		1				
152-1	424316-3	CHECK VALVE		1				
153-1	6676500500	CHECK VALVE PLATE		1	*			
153-2	454834-7	CHECK VALVE PLATE	<	1				
154-2	412129-4	TUBE 3-105		1				
155-2	282027-4	HOSE CLAMP 6		1				
156-1	422096-5	TUBE 3-25		1				
157-1	452952-5	HOSE JOINT		1				
158-1	0851199960	TUBE 3-190		1				
159	5973006000	INTAKE CASE ASSY		1				
D10		INC.160-163						
160	5973501800	CHOKE LEVER		1				
161	5973501700	CHOKE PLATE		1				
162	5973006010	TAPPING SCREW 4X12		2				
163	5973501900	INTAKE PLATE		1				
164	0043605650	SCREW ASS'Y M5X65		2	*			
164-1	911288-6	PAN HEAD SCREW M5X65	O	2				

Item	Parts No.	Description	I/C	Qty	N/O	Opt. 1	Opt. 2	Note
165	0561679990	HOSE CLAMP		1				
166	0561439990	HOSE CLAMP		1				
167-1	6676500400	AIR CLEANER DUCT		1				
168	5973501301	MUFFLER GASKET		1	*			
168-1	5973501302	MUFFLER GASKET	O	1	*			
168-2	346682-7	MUFFLER GASKET	O	1				
169-2	5973001003	MUFFLER EXHAUST		1				
171-1	266771-1	SOCKET HEAD BOLT M6X18		3				
172-1	424105-6	PLUG CAP		1				
173-1	324891-8	PLUG CAP SPRING		1				
174	0119049970	SOCKET HEAD BOLT M4X20		2				
175-1	638784-6	WIRE		1				
176-1	638710-5	LEAD WIRE		1				
177	5977001010	IGNITION COIL		1				
178	5977001020	FLYWHEEL COMPL		1				
179-1	264054-3	FLANGE NUT M10		1				
180	6679002000	SWIVEL PIPE COMPL		1	*			
180-1	168746-5	SWIVEL PIPE COMPLETE	O	1				
181	0561769990	HOSE CLAMP		1				
182	6679500000	FLEXIBLE PIPE		1	*			
182-1	412115-5	FLEXIBLE PIPE	O	1				
183	0561009990	HOSE CLAMP		1				
184	6679501801	STRAIGHT PIPE		1	*			
184-1	455633-0	STRAIGHT PIPE 450	O	1				
185	6679501900	END PIPE		1	*			
185-1	455632-2	END PIPE 450	O	1				
186	6679001000	BAND COMPL		2				
187	5973502300	CAM LIFTER		1	*			
187-1	313267-4	CAM LIFTER R	<	1				
188	6672500400	FAN COVER		1				
189	6672500300	ROCK RIVET		2				
190-1	443174-8	INSULATION LABEL A		1				
191-1	443175-6	INSULATION LABEL B		1				
192-1	443176-4	INSULATION LABEL C		1				
198	331967-4	COTTER		4				
199	331937-3	EXHAUST PORT SPACER		1				
200-1	412130-9	TUBE 10-50		1				
201	412127-8	TUBE 10-170		1				
202	412124-4	TUBE 10-220		1				
203	412122-8	TUBE 3-240		1				
204	814K82-0	SERIAL NO. LABEL		1				
205	135600-8	CYLINDER HEAD ASS'Y 76CC		1	*			
D10		INC. 63,94-97,198			*			
205-1	135619-7	CYLINDER HEAD ASS'Y 76CC	<	1				
D10		INC. 63,94-97,198						
206	443193-4	INSULATION LABEL D		1				
A01-1	194717-6	BOX WRENCH SET		1				
A02	6679504400	END PIPE		1	*			

Model No. BBX7600 ENGINE BLOWER

Item	Parts No.	Description	I/C	Qty	N/O	Opt. 1	Opt. 2	Note
A02-1	455634-8	FLAT PIPE	O	1				

NHP Motoculture
Cultivez votre univers