Retrouvez cette piece sur nhp-motoculture.fr en cliquant sur la reference

Model No.DUB143 CORDLESS BLOWER

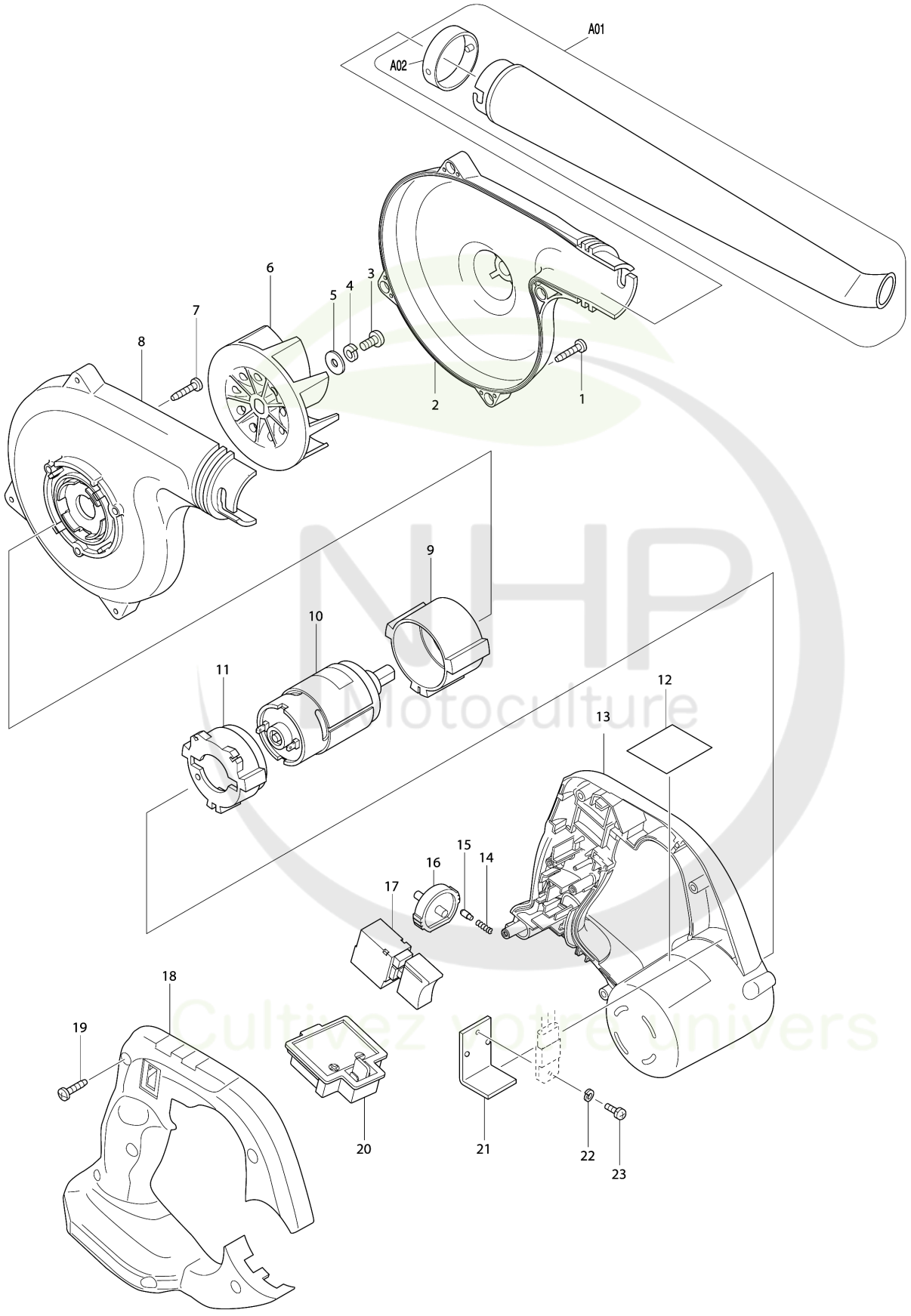

Model No.DUB143 CORDLESS BLOWER

Item	Parts No.	Description	I/C	Qty	New/Old	Opt. 1	Opt. 2	Note
001	KW00000210	TAPPING SCREW 4X18		4				
002	TP00000112	FAN HOUSING SET(AS-890FHL-MK-R		1				
D10		INC. 8						
003	KW00000220	PAN HEAD SCREW M5X8		1				
004	KW00000160	SPRING WASHER M5		1				
005	KW00000170	FLAT WASHER 5		1				
006	KW00000100	FAN AP-10302		1				
007	KW00000210	TAPPING SCREW 4X18		3				
008	TP00000112	FAN HOUSING SET(AS-890FHL-MK-R		1				
D10		INC. 2						
009	KW00000150	MOTOR RUBBER RING A		1				
010	TP00000082	DC MOTOR (AS-890MS14-MK-R)		1				
011	TP00000083	MOTOR RUBBER RING B		1				
013	TP00000175	MOTOR HOUSING SET		1	*			
D10		INC. 18			*			
013-1	TP00000210	MOTOR HOUSING SET	S	1				
D10		INC. 18						
014	TP00000084	SPRING		1				
015	TP00000085	PIN		1				
016	TP00000086	DIAL		1	*			
016-1	TP00000212	DIAL	S	1				
017	TP00000204	SWITCH AS-890SW05-MK-R		1	*			
017-1	TP00000209	SWITCH AS-890SW05A-MK-R	S	1				
018	TP00000175	MOTOR HOUSING SET		1	*			
D10		INC. 13			*			
018-1	TP00000210	MOTOR HOUSING SET	S	1				
D10		INC. 13						
019	KW00000210	TAPPING SCREW 4X18		6				
020	643828-9	TERMINAL		1				
021	KW00000200	HEAT SINK AM-10313		1	*			
022	KW00000270	SPRING WASHER M3		1	*			
023	TP00000081	SCREW M3X6		1	*			
A01	TP00000199	LONG NOZZLE ASSEMBLY		1	*			
A01-1	191G09-6	GARDEN NOZZLE ASSEMBLY SET	O	1				
A02	TP00000201	JOINT		1				

Please order the parts with part number.

Print Date 26/1/2022