Retrouvez cette piece sur nhp-motoculture.fr en cliquant sur la reference

Numéro du modèle DUB182 CORDLESS BLOWER

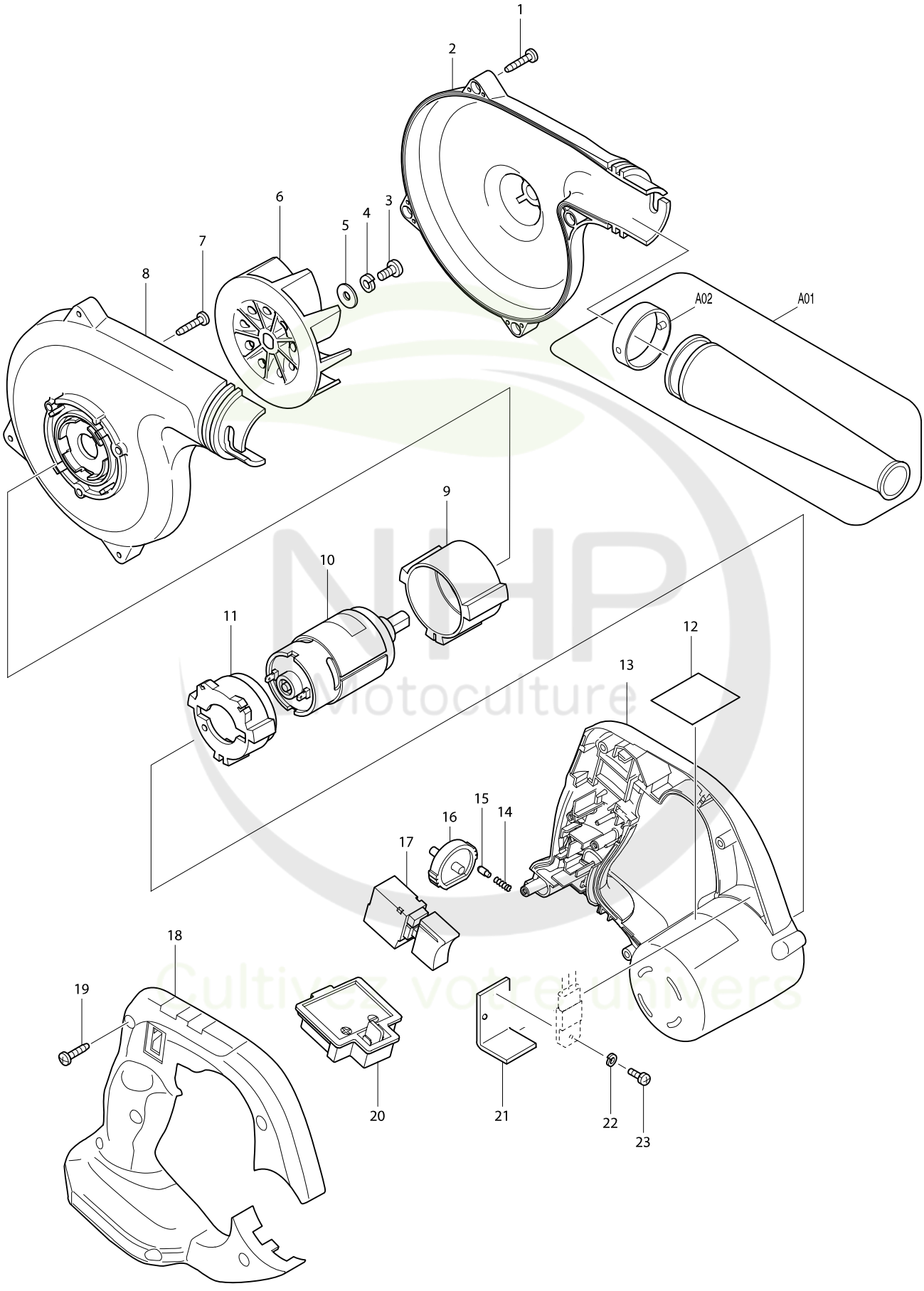

Numéro du modèle DUB182 CORDLESS BLOWER

Position	Référence piè	Description	Echa	QTE	N/O	Option 1	Option 2	COMMENTAIRE
001	KW00000210	TAPPING SCREW 4X18		4		P1		
002	TP00000112	FAN HOUSING SET(AS-890FHL-MK-R		1		P20		
D10		INC. 8						
003	KW00000220	PAN HEAD SCREW M5X8		1		P1		
004	KW00000160	SPRING WASHER M5		1		P1		
005	KW00000170	FLAT WASHER 5		1		P1		
006	KW00000100	FAN AP-10302		1		P4		
007	KW00000210	TAPPING SCREW 4X18		3		P1		
008	TP00000112	FAN HOUSING SET(AS-890FHL-MK-R		1		P20		
D10		INC. 2						
009	KW00000150	MOTOR RUBBER RING A		1		P2		
010	TP00000113	MOTOR SET (AS-890-MS18-R)		1		P22		
011	TP00000083	MOTOR RUBBER RING B		1		P2		
013	TP00000087	MOTOR HOUSING		1	*	P22		
013-1	TP00000166	MOTOR HOUSING	S	1	*			
013-2	TP00000176	MOTOR HOUSING SET	<	1	*	P63		
D10		INC. 18			*			
013-3	TP00000211	MOTOR HOUSING SET	S	1				
D10		INC. 18						
014	TP00000084	SPRING		1		P1		
015	TP00000085	PIN		1		P1		
016	TP00000086	DIAL		1	*	P1		
016-1	TP00000212	DIAL	S	1				
017	KW00000230	SWITCH		1	*	P20		
017-1	TP00000165	SWITCH	S	1	*			
017-2	TP00000170	SWITCH	<	1	*			
017-3	TP00000174	SWITCH	<	1	*	P17		
017-4	TP00000204	SWITCH AS-890SW05-MK-R	<	1	*	P20		
017-5	TP00000209	SWITCH AS-890SW05A-MK-R	S	1				
018	TP00000115	HANDLE COVER 18.0V		1	*	P17		
018-1	TP00000168	HANDLE COVER	S	1	*			
018-2	TP00000176	MOTOR HOUSING SET	<	1	*	P63		
D10		INC. 13			*			
018-3	TP00000211	MOTOR HOUSING SET	S	1				
D10		INC. 13						
019	KW00000210	TAPPING SCREW 4X18		6		P1		
020	GM00001055	BATTERY HOLDER (C2010185006)		1	*	P4		
020-1	GM00001116	BATTERY HOLDER (C2004185006)	O	1				
021	KW00000200	HEAT SINK AM-10313		1	*	P1		
022	KW00000270	SPRING WASHER M3		1	*	P1		
023	TP00000081	SCREW M3X6		1	*	P1		
A01	132025-7	NOZZLE ASS'Y		1		A18		
C10	414145-2	JOINT		1		P6		