Retrouvez cette piece sur nhp-motoculture.fr en cliquant sur la reference

Model No.DCBL137 Cordless Blower Vacuum

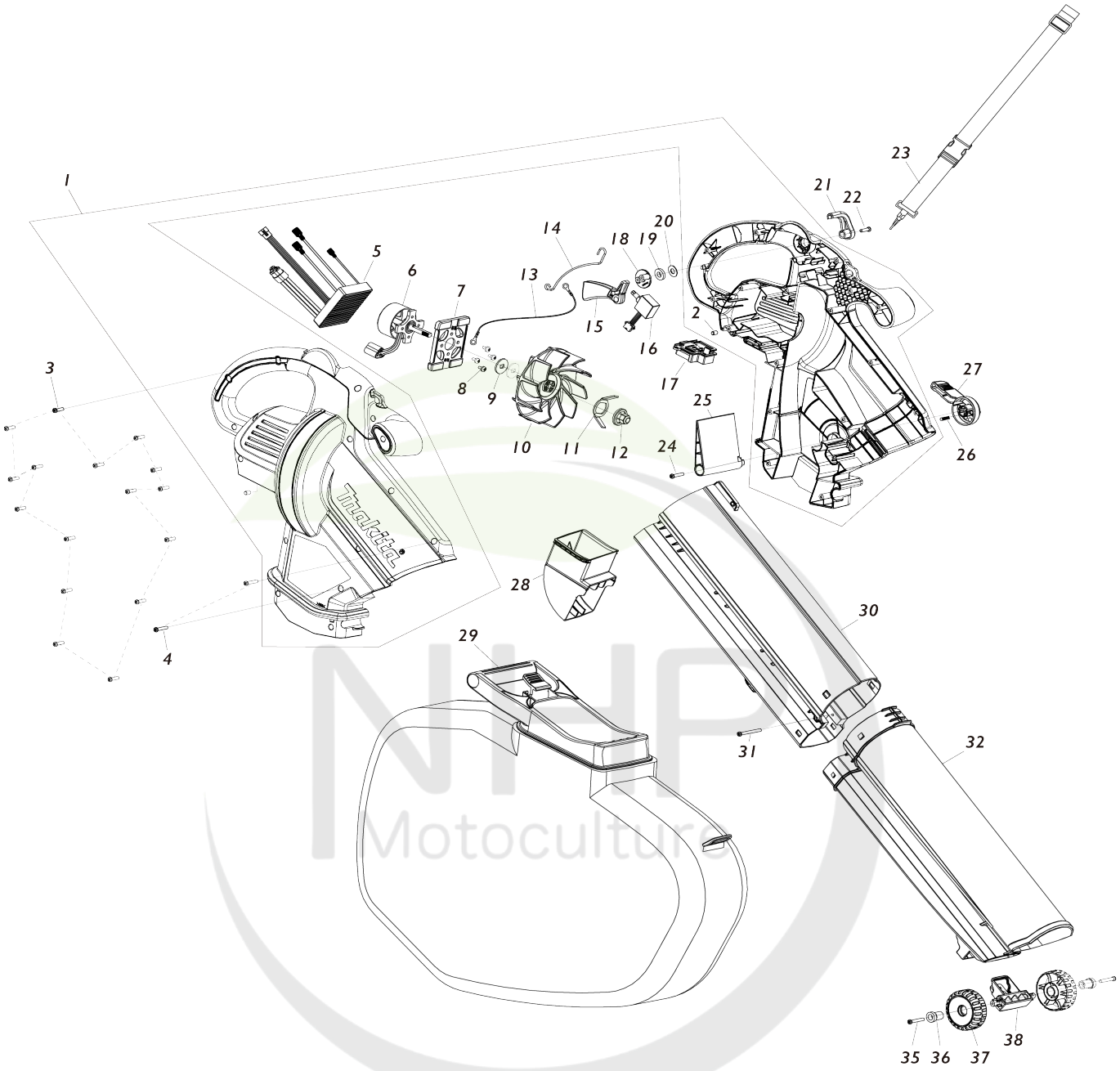

NHP Motoculture
Cultivez votre univers

Model No.DUB187 Cordless Blower Vacuum

Item No.	Parts No.	Description	Interchangeability	Q'ty	New/ Old	Note1	Note2
001	GB00000172	HOUSING SET		1			
001		INC. 2					
002	GB00000072	RUBBER PIN 5.5X8.5		2			
003	GB00000003	TAPPING SCREW ST4.2X15		16			
004	GB00000025	TAPPING SCREW ST4.2X20		2			
005	GB00000183	CONTROLLER ASSY		1			
006	GB00000191	BRUSHLESS MOTOR ASSY		1			
007	GB00000181	MOTOR MOUNT		1			
008	GB00000180	TRAS HEAD SCREW M8X10 WITH WG		4			
009	GB00000179	SIM RING 2MM		2			
010	GB00000178	FAN 115		1			
011	GB00000177	SHREDDER BLADE 53		1			
012	GB00000176	HEX NUT M8 WITH PLASTIC CAP		1			
013	GB00000174	ANTI-STATIC WIRE ASSY		1			
014	GB00000173	ANTI-STATIC STEEL WIRE		1			
015	GB00000010	SWITCH TRIGGER		1			
016	GB00000175	SWITCH		1			
017	GB00000124	TERMINAL		1	*		
017-1	GB00000184	TERMINAL	O	1	*		
017-2	GB00000206	TERMINAL	O	1			
018	GB00000008	SWITCH STOPPER CAM		1			
019	GB00000007	RUBBER RING 12.5X3.5		1			
020	GB00000006	FLAT WASHER 12.5		1			
021	GB00000004	SWITCH LEVER		1			
022	GB00000003	TAPPING SCREW ST4.2X15		1			
023	GB00000038	SHOULDER HARNESS ASSY		1	*		
023-1	GB00000198	SHOULDER HARNESS ASSY	X	1			
024	GB00000025	TAPPING SCREW ST4.2X20		1			
025	GB00000027	WIND SELECT SHUTTER		1	*		
025-1	GB00000199	WIND SELECT SHUTTER	X	1			
026	GB00000041	SELECTOR STOPPER PIN ASSY		1			
027	GB00000171	SELECTOR LEVER		1			
028	GB00000192	SHREDDER DUST OUTLET		1			
029	GB00000185	DUST BAG ASSY		1			
030	GB00000190	UPPER TUBE		1			
031	GB00000189	TAPPING SCREW ST4.2X40		1			
032	GB00000188	LOWER TUBE		1			
035	GB00000036	TAPPING SCREW ST4.2X25		2			
036	GB00000035	WHEEL SHAFT		2			
037	GB00000166	WHEEL 61		2			
038	GB00000167	WHEEL BRACKET		1			
A02B	197280-8	Battery BL1850B set		1			
A03B	***DC18WC	DC18WC BATTERY CHARGER		1			
A03B		COMPO-PARTS					
A04B	450128-8	Battery cover		1			
F01	GB00000165	T SHAPE VACUUME NOZZLE ASSY		1			
F02	1918R3-0	Joint A hose attachment set		1			

NHP Motoculture
Cultivez votre univers

NHP Motoculture
Cultivez votre univers