Retrouvez cette piece sur nhp-motoculture.fr en cliquant sur la reference

SERVICE DRAWING

MODEL NO. PB2504

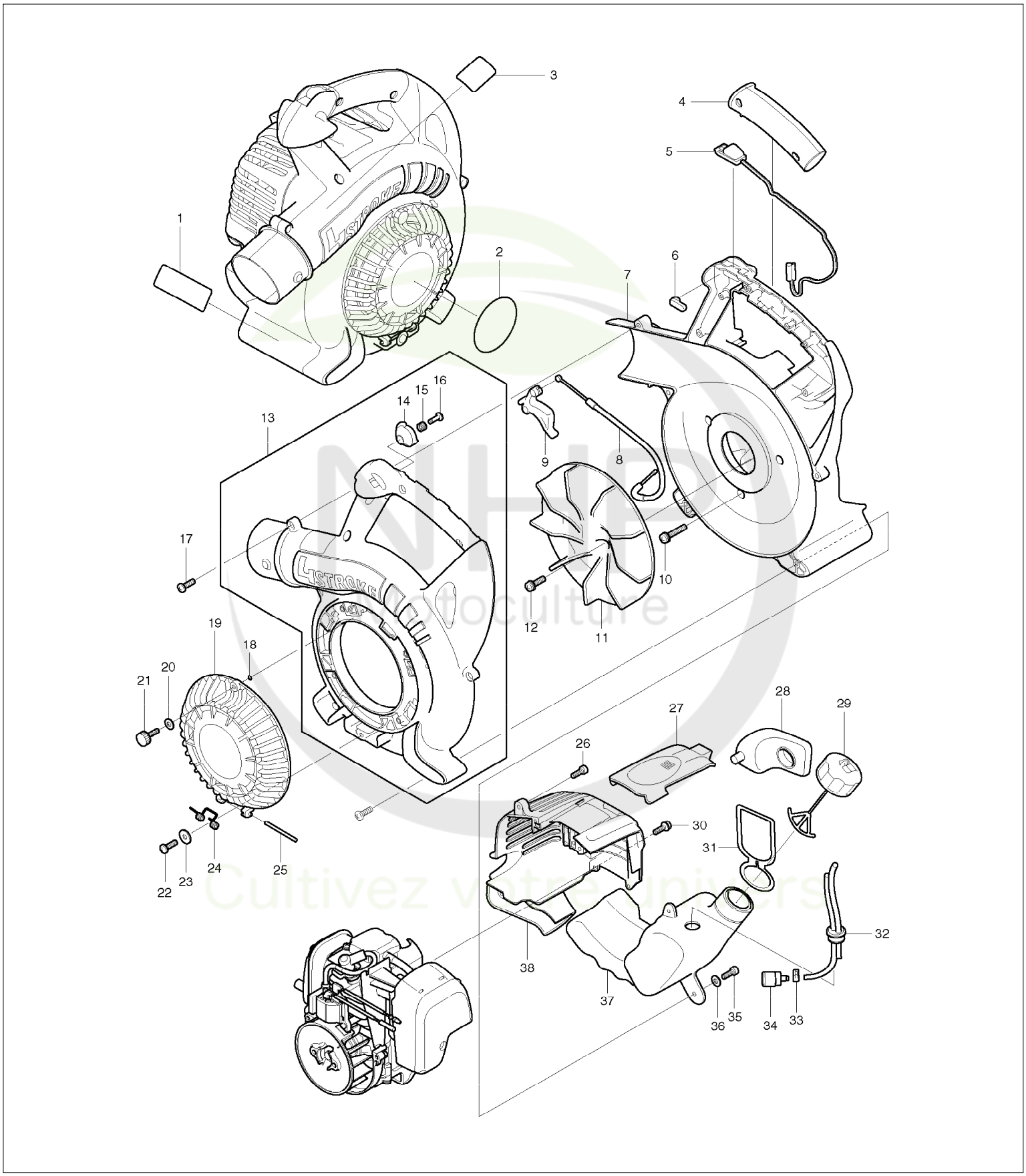

NHP Motoculture
Cultivez votre univers

SERVICE DRAWING

MODEL NO. PB2504

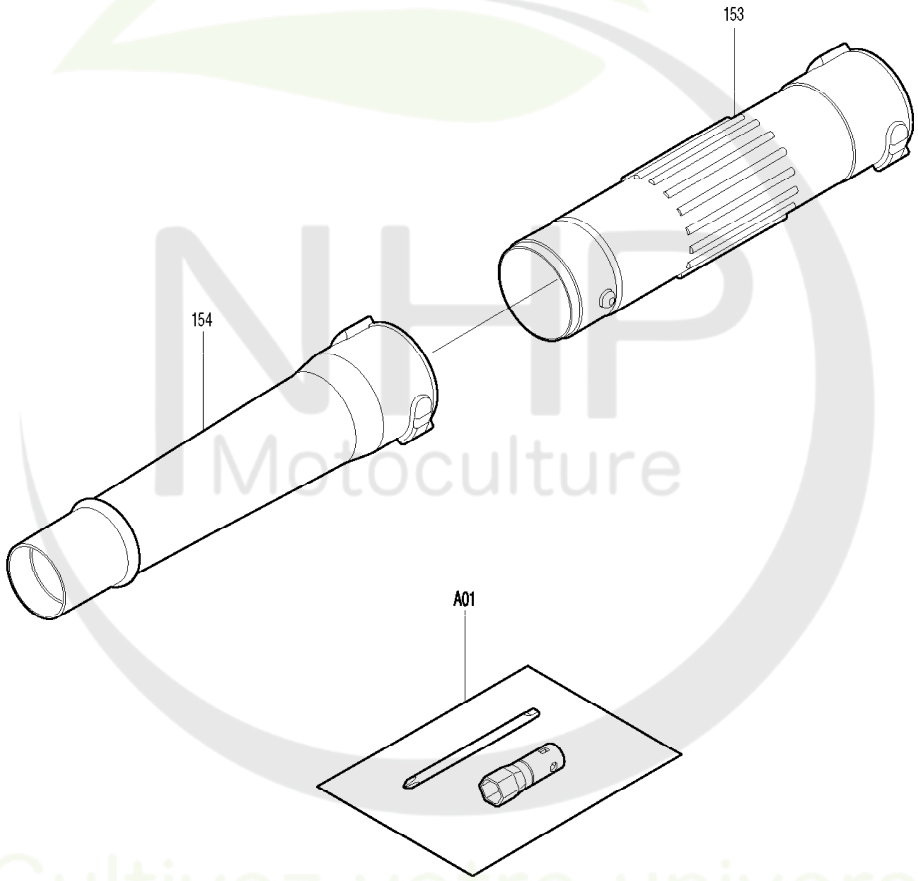

NHP Motoculture
Cultivez votre univers

SERVICE DRAWING

MODEL NO. PB2504

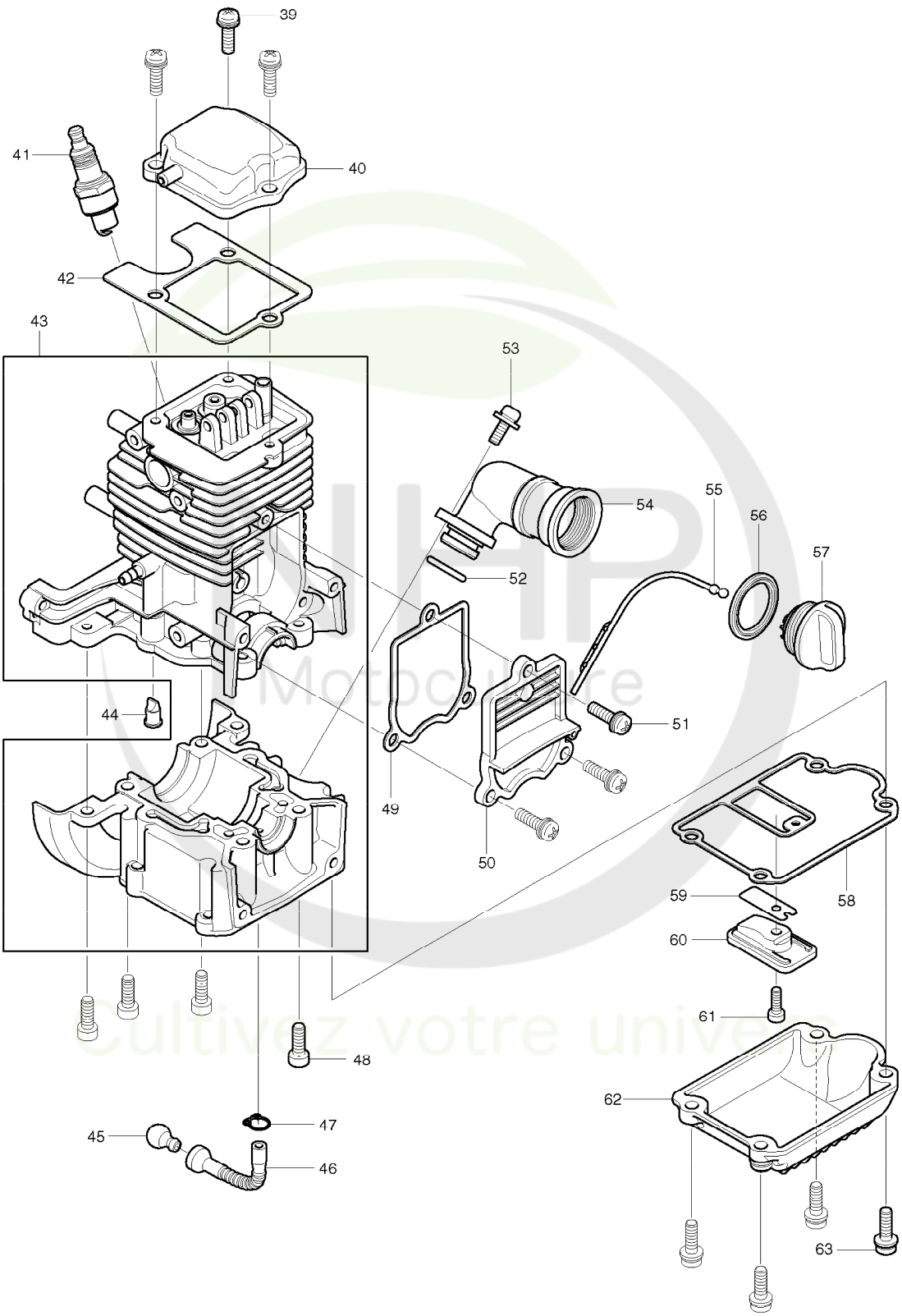

SERVICE DRAWING

MODEL NO. PB2504

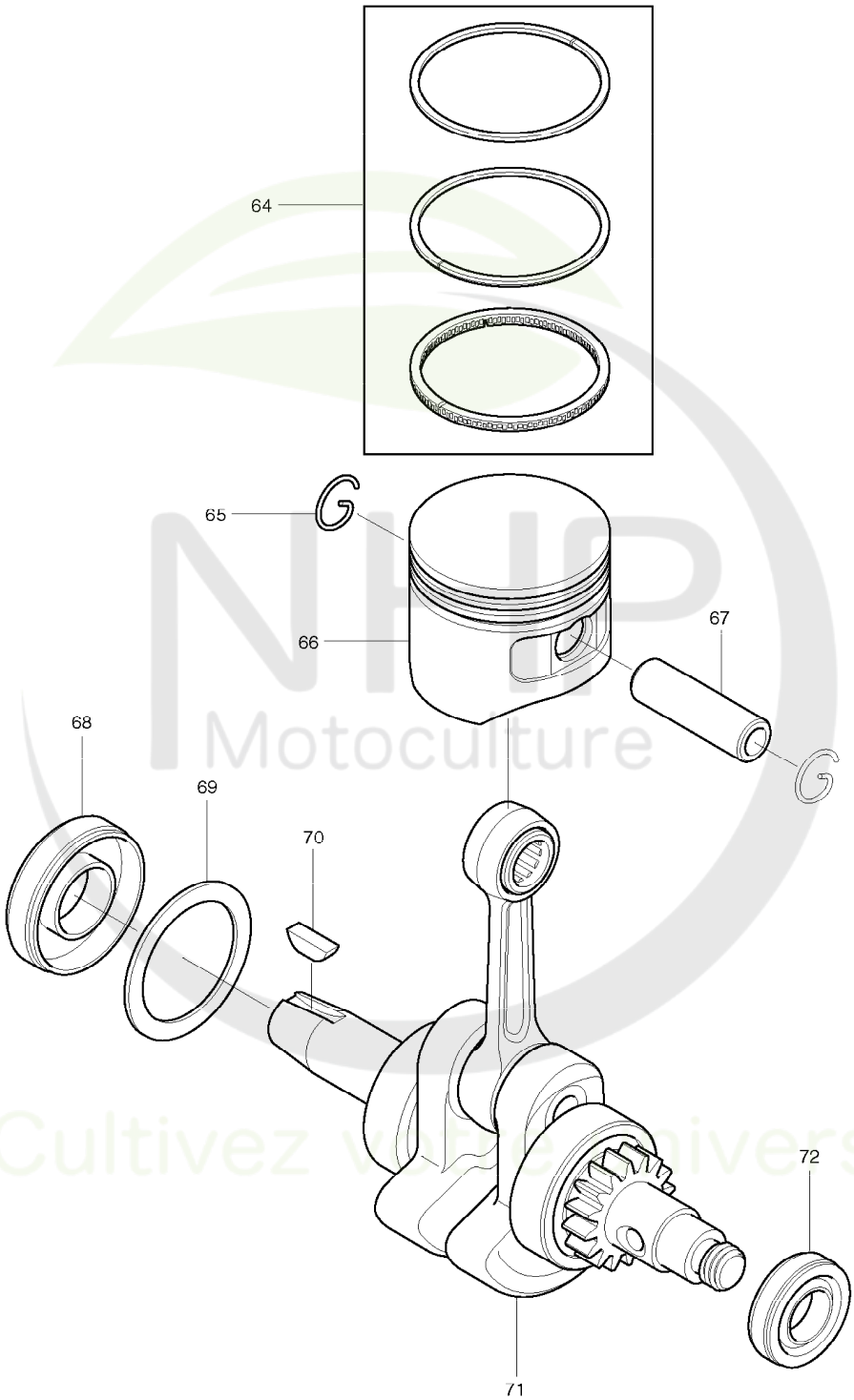

NHP Motoculture
Cultivez vos envies

SERVICE DRAWING

MODEL NO. PB2504

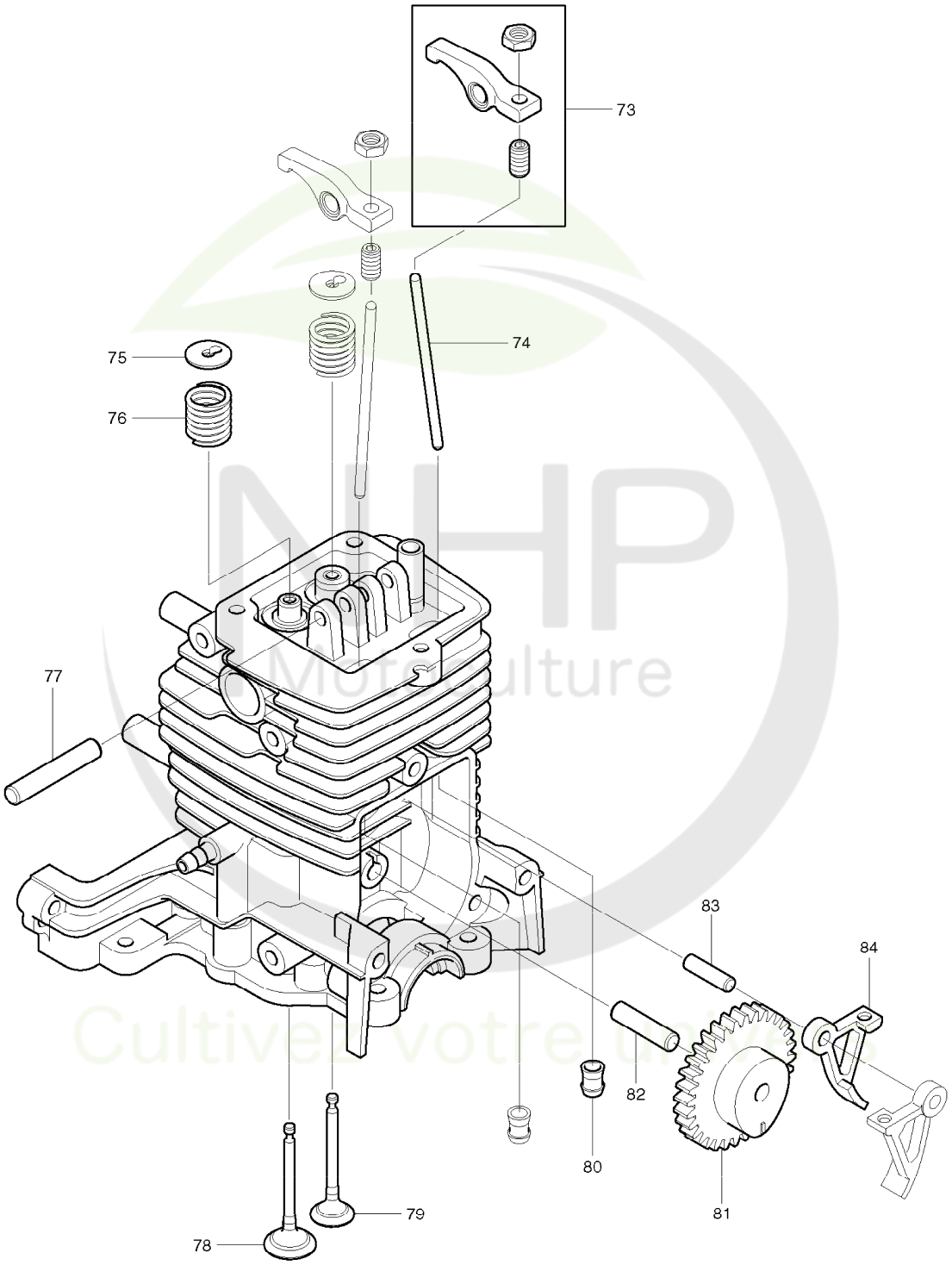

SERVICE DRAWING

MODEL NO. PB2504

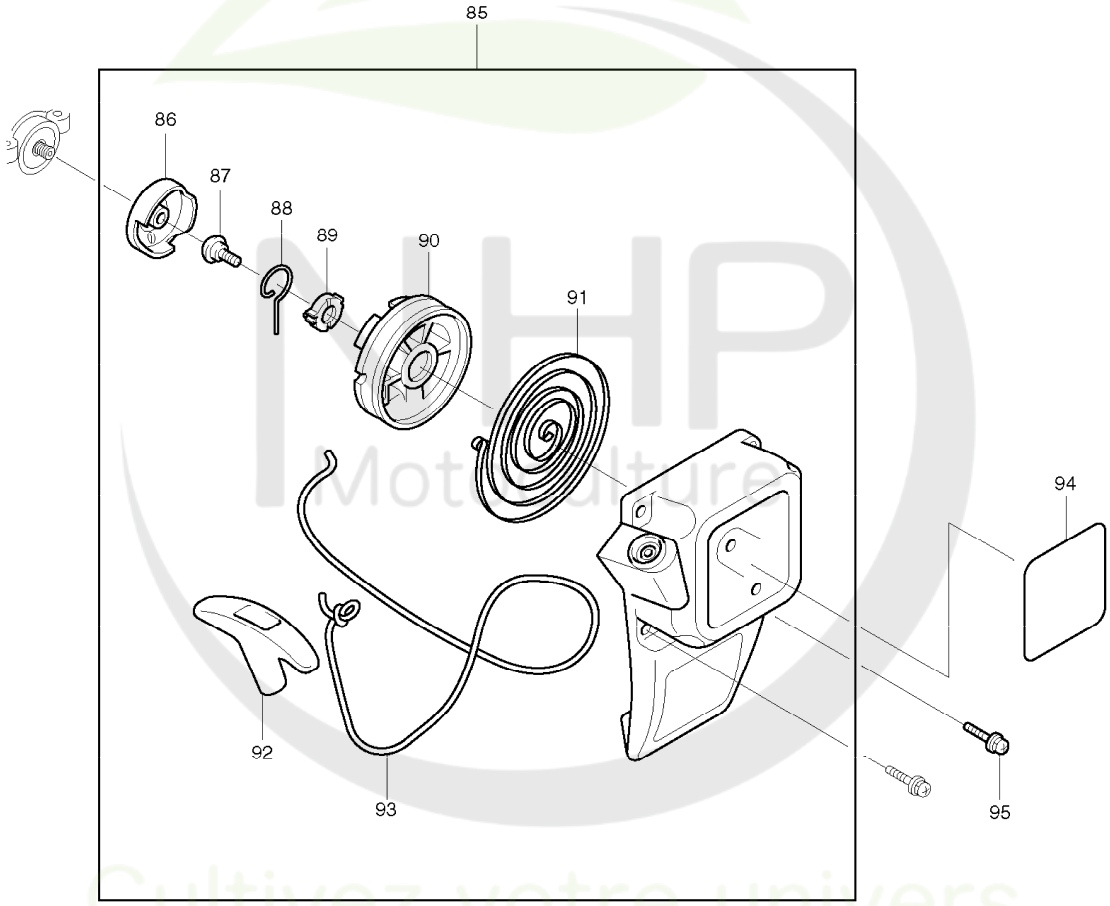

NHP Motoculture
Cultivez votre univers

SERVICE DRAWING

MODEL NO. PB2504

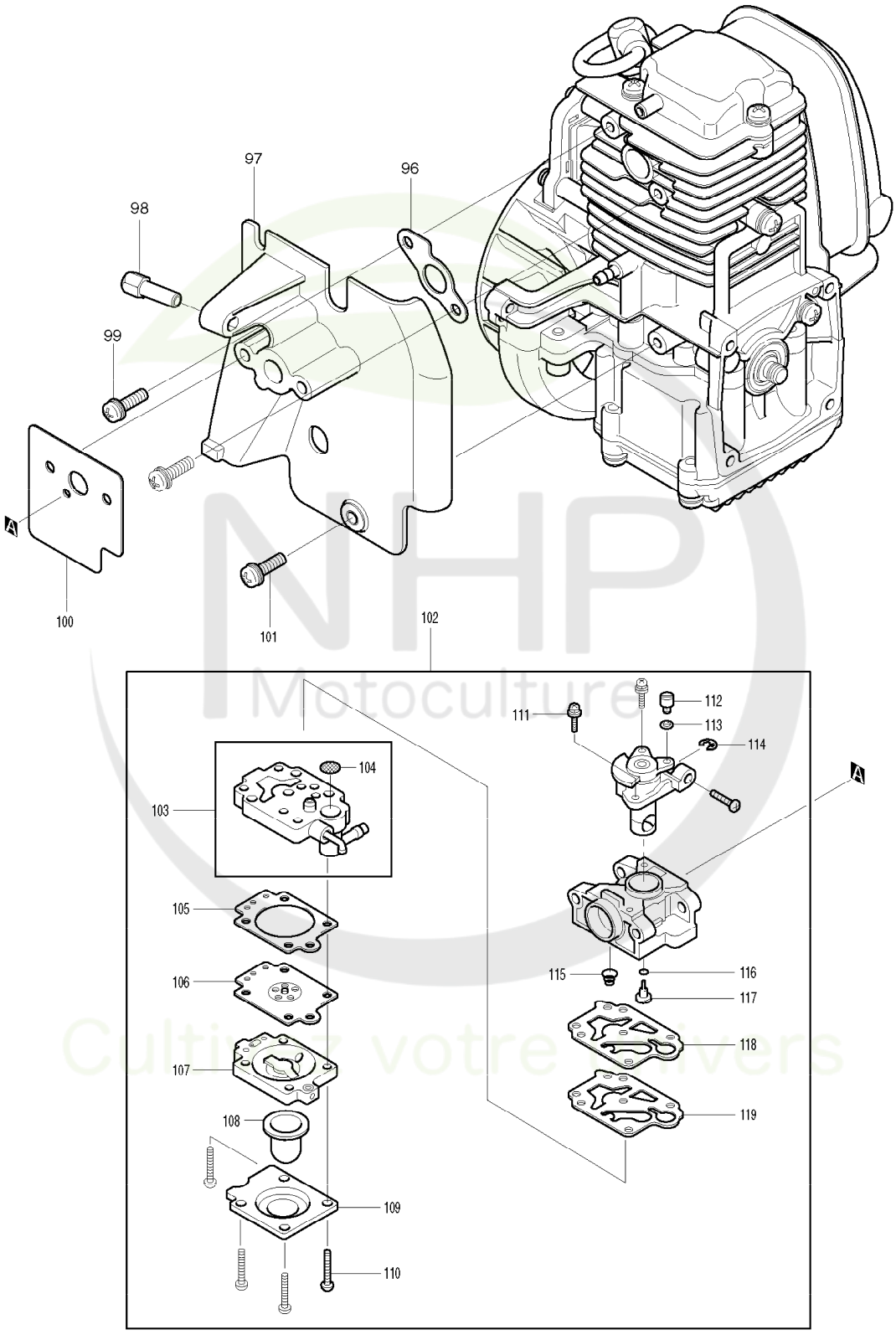

NHP Motoculture
Cultivez votre univers

SERVICE DRAWING

MODEL NO. PB2504

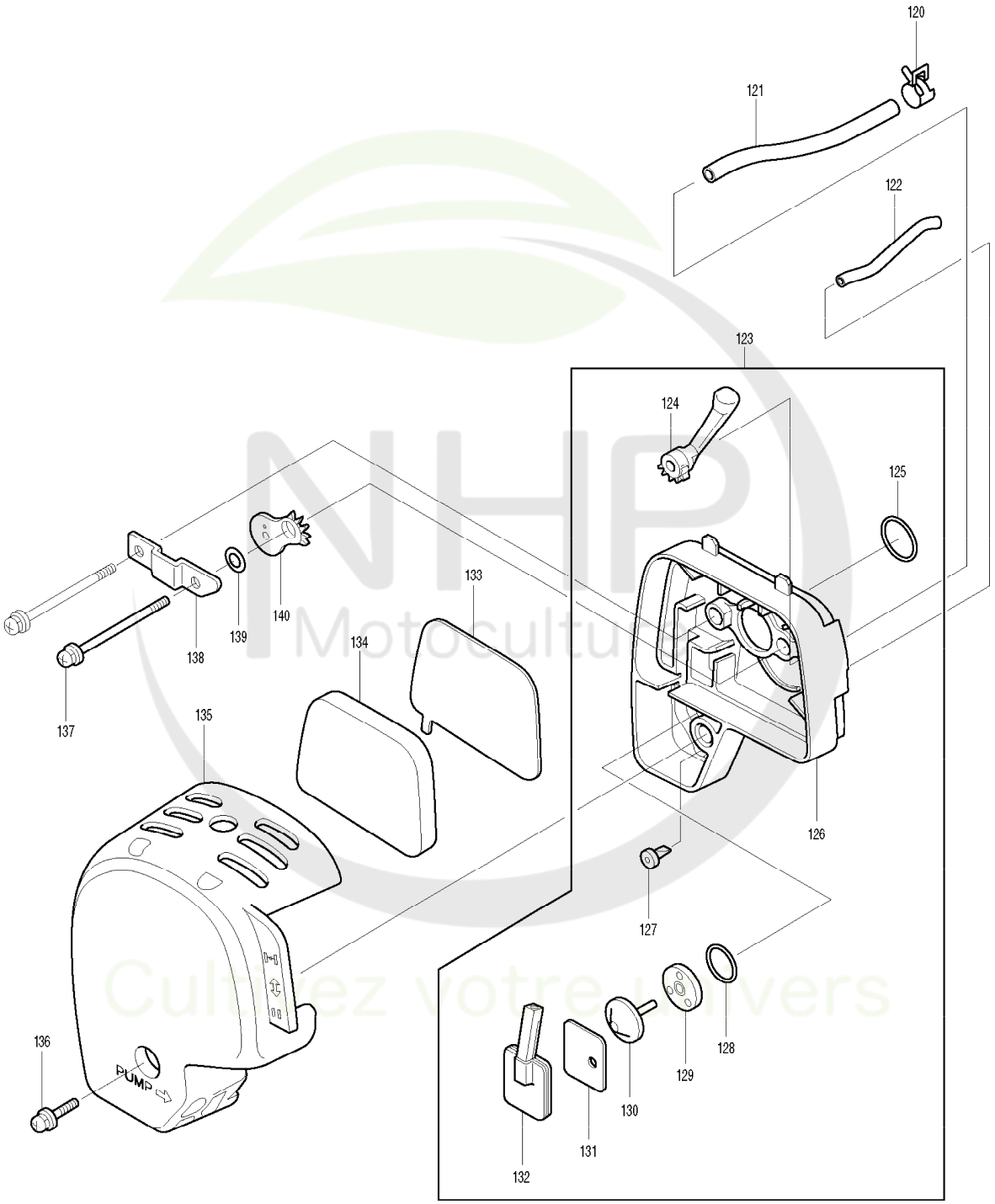

SERVICE DRAWING

MODEL NO. PB2504

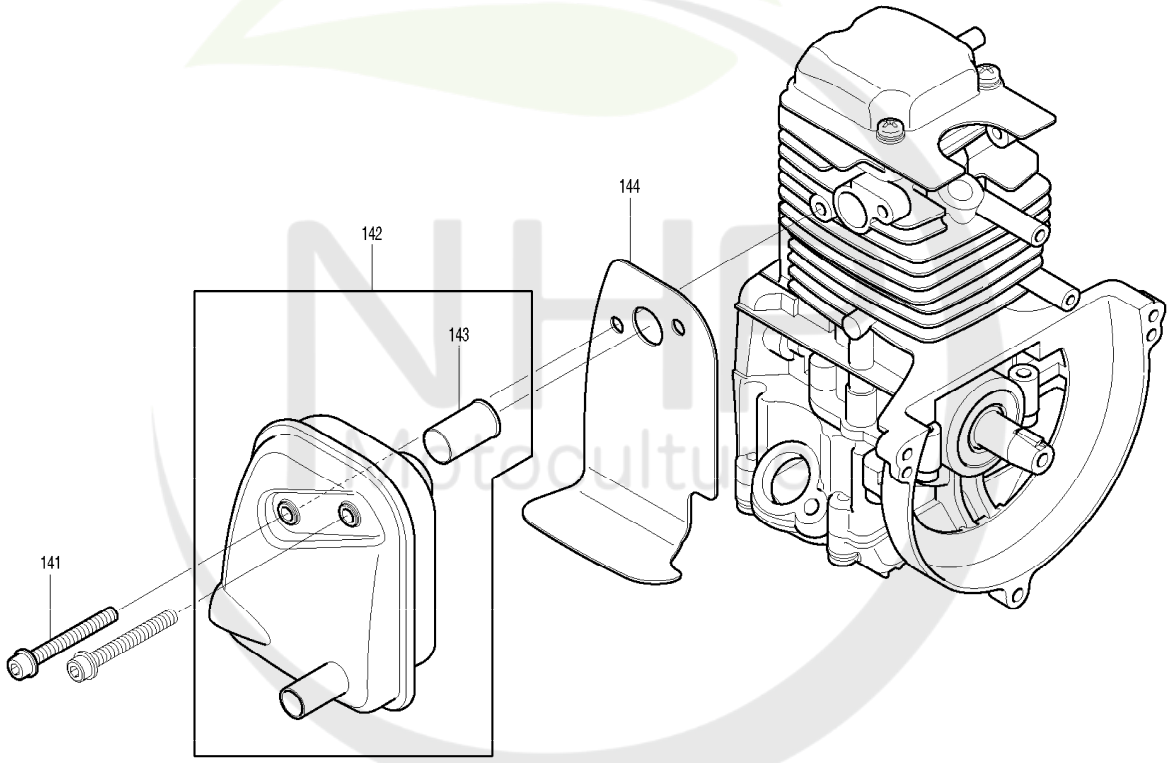

Cultivez votre univers

SERVICE DRAWING

MODEL NO. PB2504

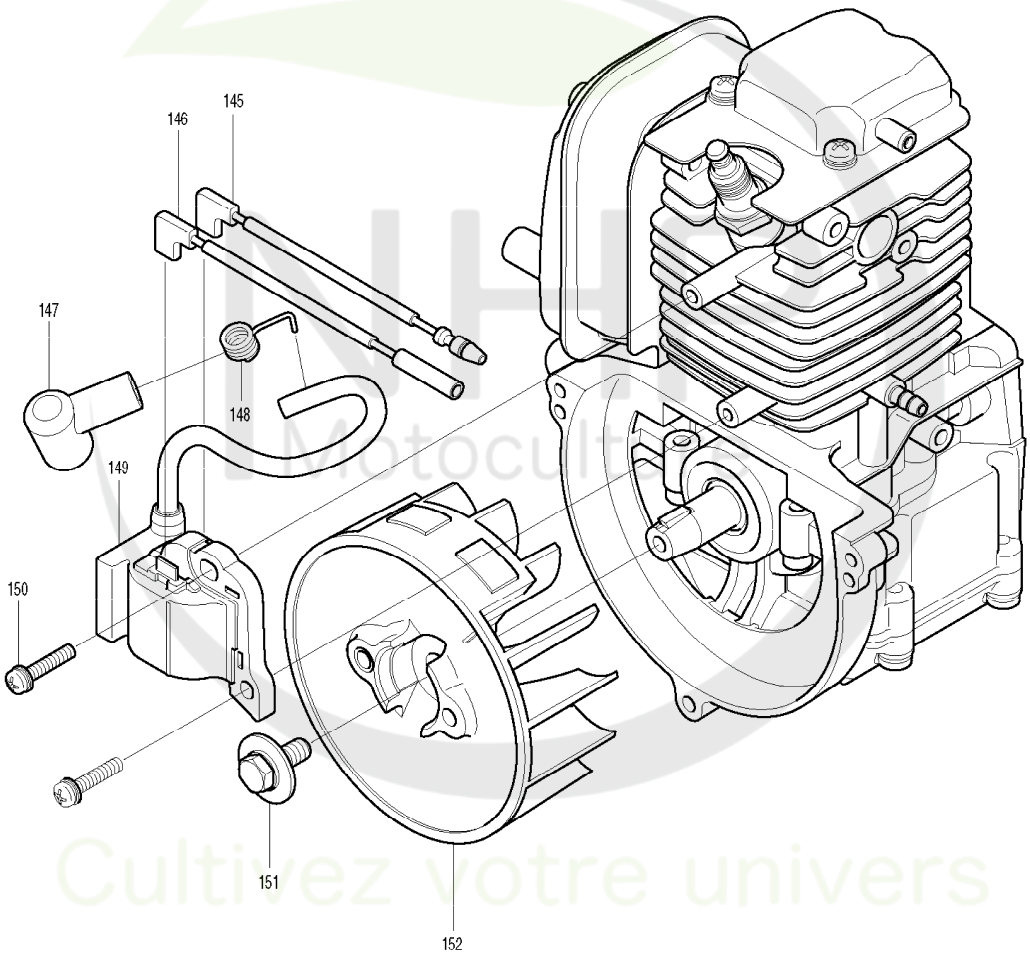

Cultivez votre univers

SPARE PARTS LIST

MODEL NO. PB2504

ITEM	PART NO.	DESCRIPTION	QTY	NOTE
001	0736289980	CAUTION LABEL	1	
002	6659502400	PROTECTOR LABEL	1	
003	6609513200	CAUTION LABEL	1	
004	6655500000	GRIP	1	
005	6655001000	SWITCH COMPL	1	
006	6651500500	FRICTION PUBBER	1	
007	6651014000	VOLUTE CASE 2 COMPL	1	
008	0630029730	CONTROL CABLE	1	
009	**********	******************************	***	******************************
010	0043605300	SCREW ASS'Y	3	
011	6651003000	IMPELLER COMPL	1	
012	0043606200	SCREW M6X20	2	
013	6651010000	VOLUTE CASE 1 ASSY	1	
014	6655500100	CRUISE LEVER	1	
015	6655500200	SPRING	1	
016	0150049840	TAPPING SCREW 4X16	1	
017	0150059760	TAPPING SCREW 5X16	10	
018	6601503400	OUTER SNAPRING	1	
019	**********	******************************	***	******************************
020	6601503500	RUBBER WASHER	1	
021	**********	******************************	***	******************************
022	0150059760	TAPPING SCREW 5X16	1	
023	0031205003	WASHER	1	
024	6601503001	SPRING	1	
025	6601503100	SHAFT	1	
026	0150059760	TAPPING SCREW 5X16	3	
027	6656500100	PLUG COVER	1	
028	5926501600	OIL GUARD	1	
029	5926017000	FUEL TANK CAP ASSY	1	
030	0140049770	SCREW ASSY M4X16(W,SW)	2	
031	6249501501	STRAP	1	
032	0851189950	TUBE	1	
033	0561059990	HOSE CLAMP	1	
034	5236503900	FILTER	1	
035	0150059760	TAPPING SCREW 5X16	3	
036	0031005003	WASHER	3	
037	6653500000	FUEL TANK	1	
038	6656500400	ENGIN COVER	1	
039	0043605160	SCREW ASS'Y M5X16 (W,SW)	3	
040	5921004001	ROCKER COVER COMPLETE	1	
041	0650109950	SPARK PLUG CMR6A	1	
042	5921500800	ROCKER COVER GASKET	1	
043	**********	******************************	***	******************************
044	5921501800	CHECK VALVE	2	
045	5926500300	OIL WEIGHT	1	
046	5926500200	OIL TUBE	1	
047	0561059970	HOSE CLAMP	1	
048	0119059510	SOCKET HEAD BOLT M5X14	8	
049	5921500700	CAMGEAR COVER GASKET	1	
050	5921500502	CAMGEAR COVER	1	
051	0043605140	SCREW ASS'Y M5X14	3	
052	0240139950	O RING	1	
053	0043605120	SCREW ASS'Y M5X12	1	
054	5926021000	OIL PIPE COMPL	1	
055	5926501700	OIL GAUGE	1	

NHP Motoculture
Cultivez votre univers

SPARE PARTS LIST

MODEL NO. PB2504

ITEM	PART NO.	DESCRIPTION	QTY	NOTE
056	0213229990	GASKET	1	
057	5926501500	OIL CAP	1	
058	5926500100	CASE GASKET	1	
059	5921501000	REED VALVE	1	
060	5921501100	RETAINER PLATE	1	
061	0119049980	SOCKET HEAD BOLT M4X10	1	
062	5926500000	OIL CASE	1	
063	0043605180	SCREW ASS'Y	4	
064	5922004000	PISTON RING SET	1	
065	0565089970	CLIP	2	
066	5922500900	PISTON	1	
067	5232502600	PISTON PIN	1	
068	0440129960	OIL SEAL (L)	1	
069	5421500500	CLIP	1	
070	0323039990	WOODRUFF KEY	1	
071	5922003000	CRANK SHAFT ASS'Y	1	
072	0440109970	OIL SEAL (S)	1	
073	5933002000	ROCKER ARM ASS'Y	2	
074	5923500700	PUSH ROD	2	
075	5923501300	SPRING RETAINER	2	
076	5923501200	VALVE SPRING	2	
077	5933500100	ROCKER SHAFT	1	
078	5923501500	INTAKE VALVE	1	
079	5923501400	EXHAUST VALVE	1	
080	5921501400	SPACER	2	
081	5933003000	CAM GEAR ASS'Y	1	
082	5923500501	CAM GEAR SHAFT	1	
083	5923500600	CAM LIFTER SHAFT	1	
084	5923500001	CAM LIFTER	2	
085	5925001002	STARTER COVER ASS'Y	1	
086	5195500000	PULLEY	1	
087	5195002060	SET SCREW	1	
088	5195002100	SWING ARM	1	
089	5195002110	COLLAR	1	
090	5925001030	REEL	1	
091	5215002030	SPIRAL SPRING	1	
092	5225004020	HANDLE	1	
093	5925001050	STARTER ROPE	1	
094	6659502900	MODEL LABEL	1	
095	0140049770	SCREW ASSY M4X16(W,SW)	2	
096	5923501801	INSULATOR GASKET	1	
097	5923013000	INSULATOR COMPL	1	
098	0149069972	ADJUST SCREW	1	
099	0043605180	SCREW ASS'Y	2	
100	5923501900	CARBURETOR GASKET	1	
101	0043605140	SCREW ASS'Y M5X14	1	
102	5926022000	CARBURETOR	1	
103	5926002060	PUMP BODY ASS'Y	1	
104	5016004010	INLET SCREEN	1	
105	5236046040	METERING DIAPHRAGM GASKET	1	
106	5926008010	METERING DIAPHRAGM ASS'Y	1	
107	5236046140	AIR PURGE BODY ASS'Y	1	
108	5246001150	PRIMER PUMP	1	

NHP Motoculture
Cultivez votre univers

SPARE PARTS LIST

MODEL NO. PB2504

ITEM	PART NO.	DESCRIPTION	QTY	NOTE
109	5236046050	PRIMER PUMP COVER	1	
110	5236046010	PUMP COVER SCREW	4	
111	5206008030	PAN HEAD SCREW	2	
112	5236018040	SWIVEL	1	
113	5426005030	WASHER	1	
114	5316005120	RING	1	
115	5926002020	PUMP SPRING	1	
116	5246001010	O RING	1	
117	5196002020	JET	1	
118	5926002040	PUMP GASKET	1	
119	5246001040	PUMP DIAPHRAGM	1	
120	0561080010	HOSE CLAMP	1	
121	5921500900	BREATHER PIPE	1	
122	5933502100	PIPE	1	
123	5933001000	CLEANER PLATE ASS'Y	1	
124	5923502200	CHOKE LEVER	1	
125	0240159990	O RING P15	1	
126	5933005000	AIR CLEANER PLATE COMPLETE	1	
127	5923502400	CHECK VALVE (1)	1	
128	0240139970	O RING P14	1	
129	5923502500	CHECK VALVE PLATE	1	
130	5316500701	CHECK VALVE	1	
131	5923503500	GASKET SEPARATOR	1	
132	5933501600	SEPARATOR PLATE	1	
133	5933500900	AIR CLEANER ELEMENT	1	
134	5933501200	AIR CLEANER ELEMENT	1	
135	5933500800	AIR CLEANER COVER	1	
136	0140059480	SCREW ASS'Y M5X14	1	
137	5923503100	SCREW M5X68 (W,SW SUS)	2	
138	5923502600	PLATE	1	
139	0213069990	GASKET	1	
140	5923502301	CHOKE PLATE	1	
141	0119059520	SOCKET HEAD BOLT M5X40	2	
142	**********	**********	***	**********
143	**********	**********	***	**********
144	5923504300	MUFFLER GASKET	1	
145	5927010000	WIER 1	1	
146	5927011000	WIRE 2	1	
147	5927500100	PLUG CAP	1	
148	0654009931	PLUG CAP SPRING	1	
149	**********	**********	***	**********
150	0043704200	SCREW ASS'Y M4X20	2	
151	0130069940	BOLT ASSEMBLY M6X16(W,SW)	1	
152	5927500200	FLYWHEEL	1	
153	**********	**********	***	**********
154	**********	**********	***	**********
A01	6909059000	TOOL	1	
E01	6609508500	HOSE CLAMP	1	

NHP Motoculture
Cultivez votre univers