Retrouvez cette piece sur nhp-motoculture.fr en cliquant sur la reference

SERVICE DRAWING

MODEL NO. PB76004

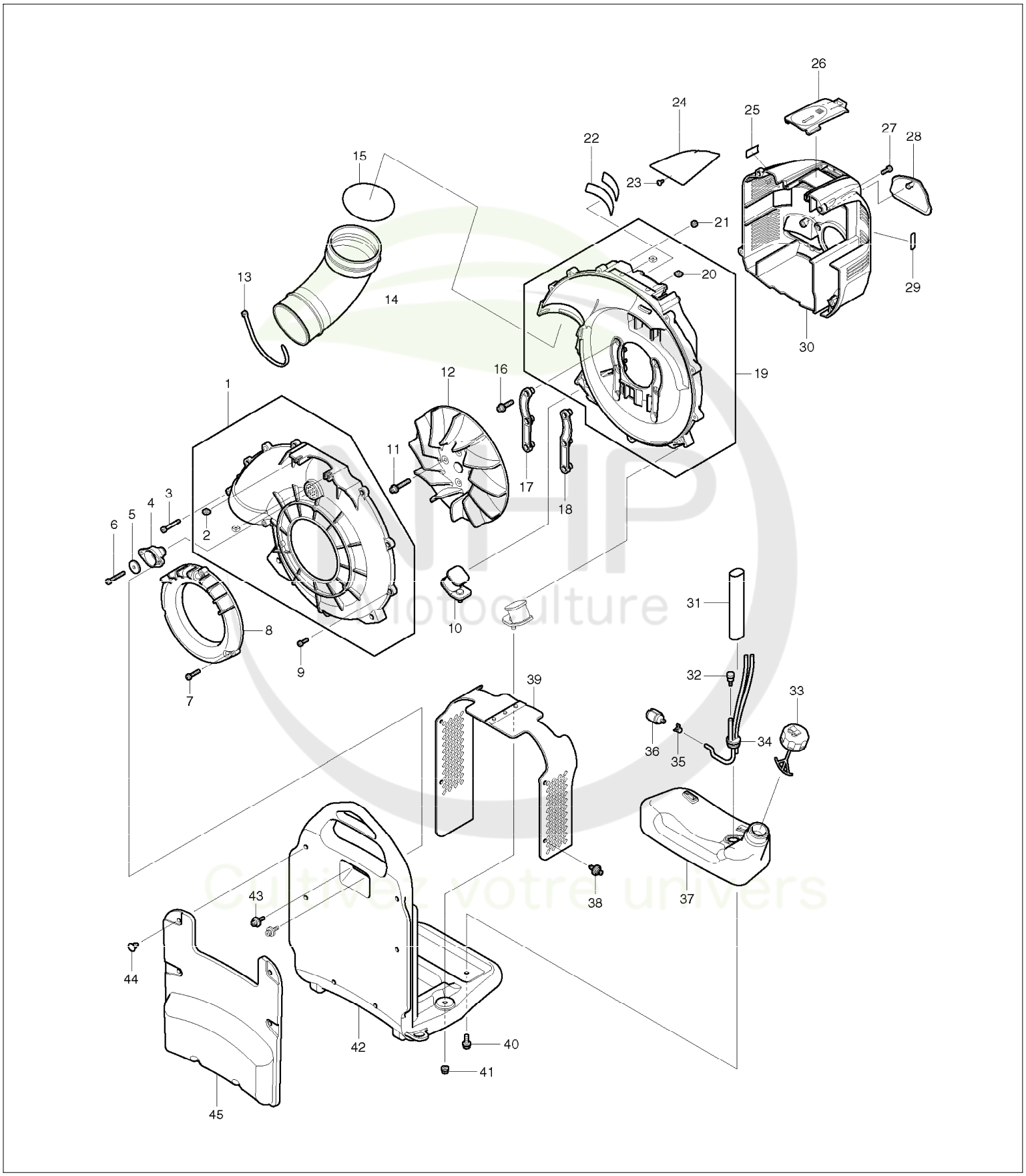

SERVICE DRAWING

MODEL NO. PB76004

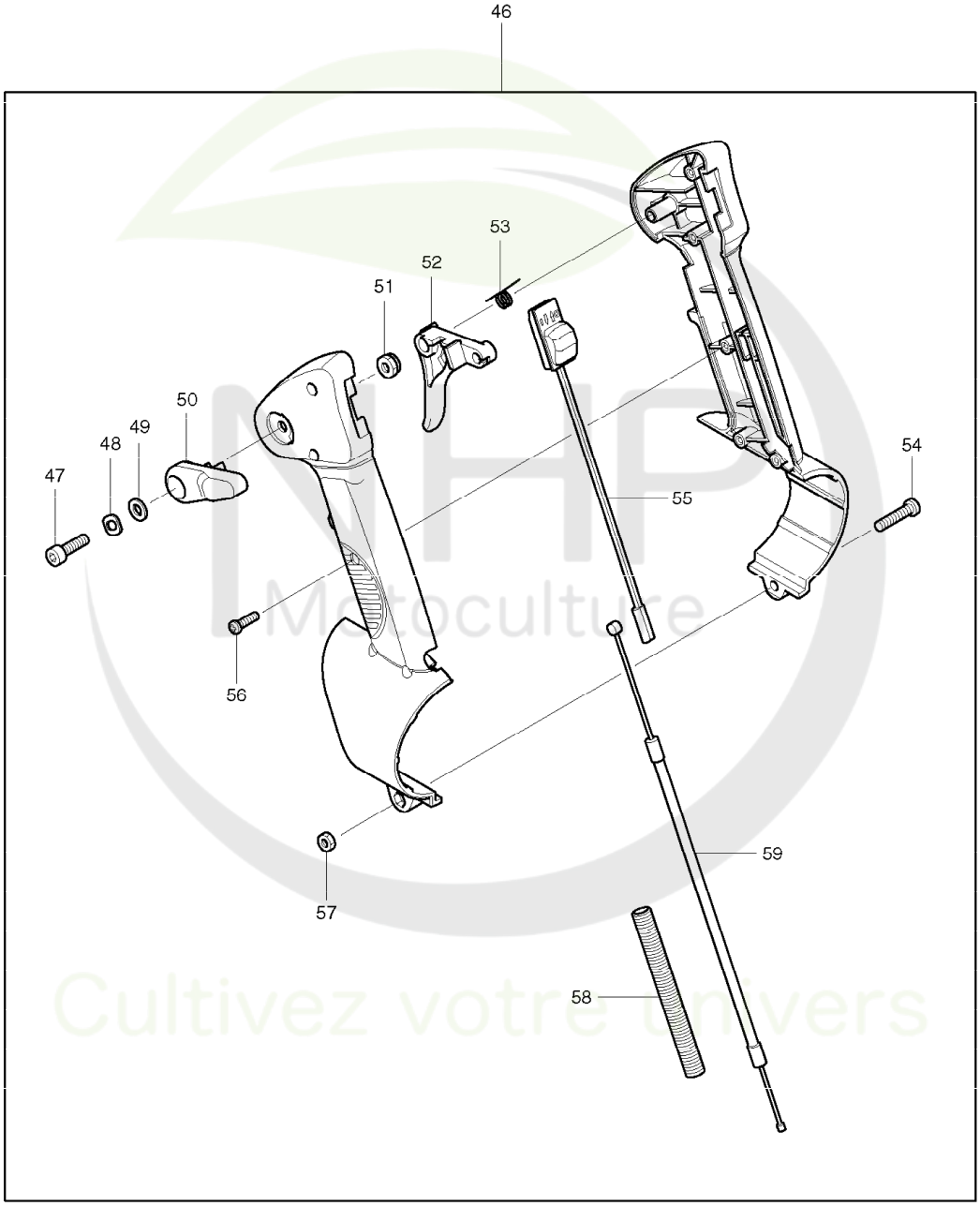

NHP Motoculture
Cultivez votre univers

SERVICE DRAWING

MODEL NO. PB76004

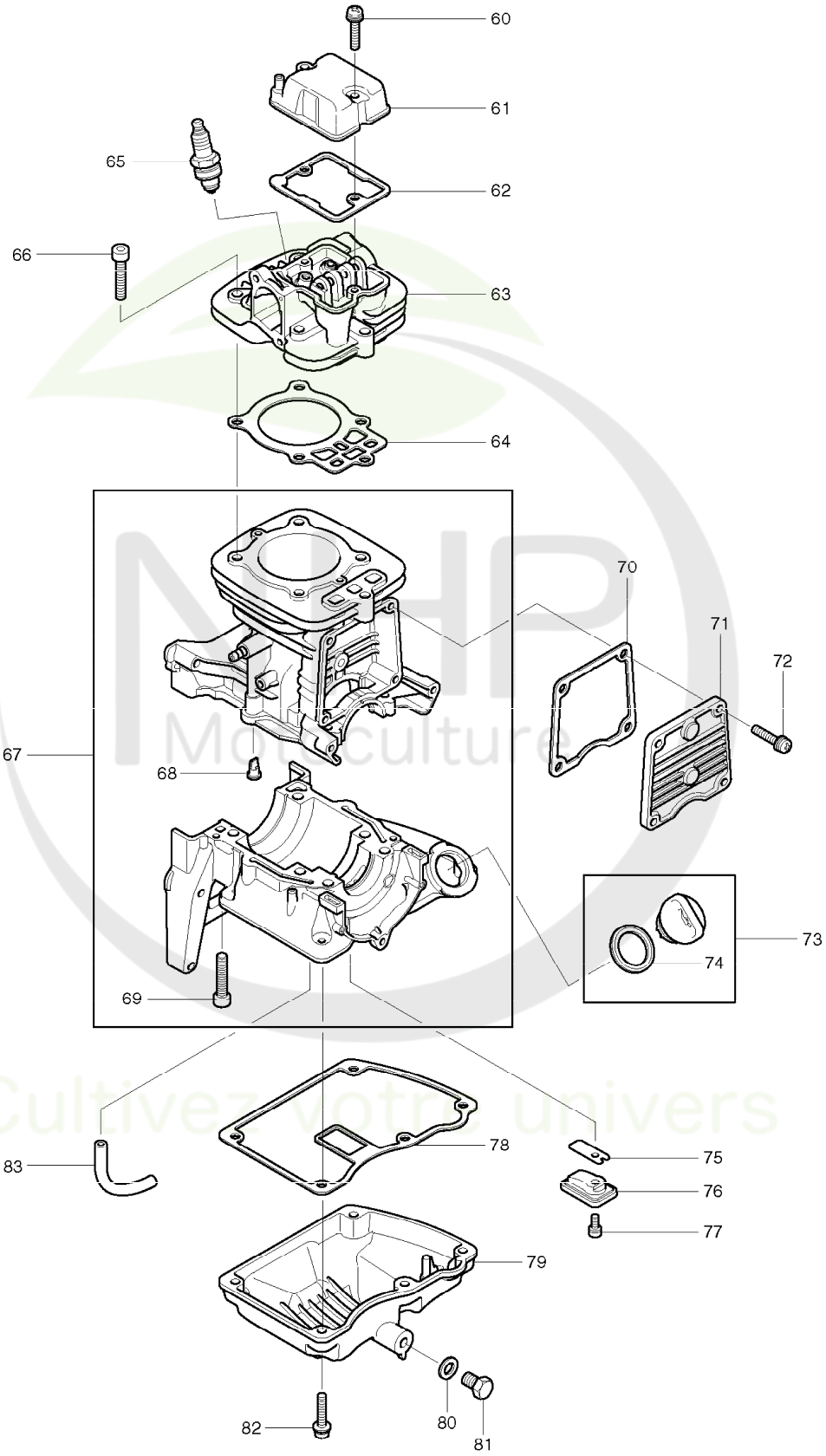

SERVICE DRAWING

MODEL NO. PB76004

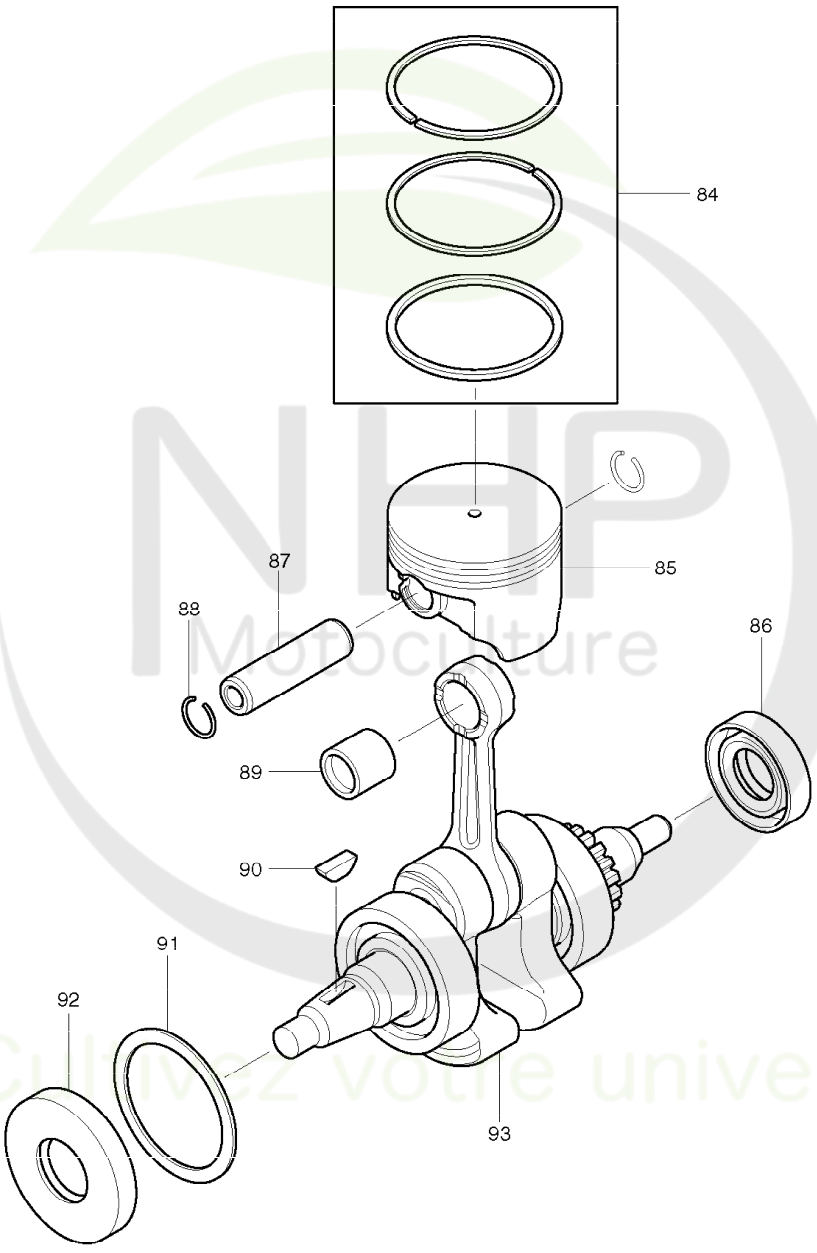

SERVICE DRAWING

MODEL NO. PB76004

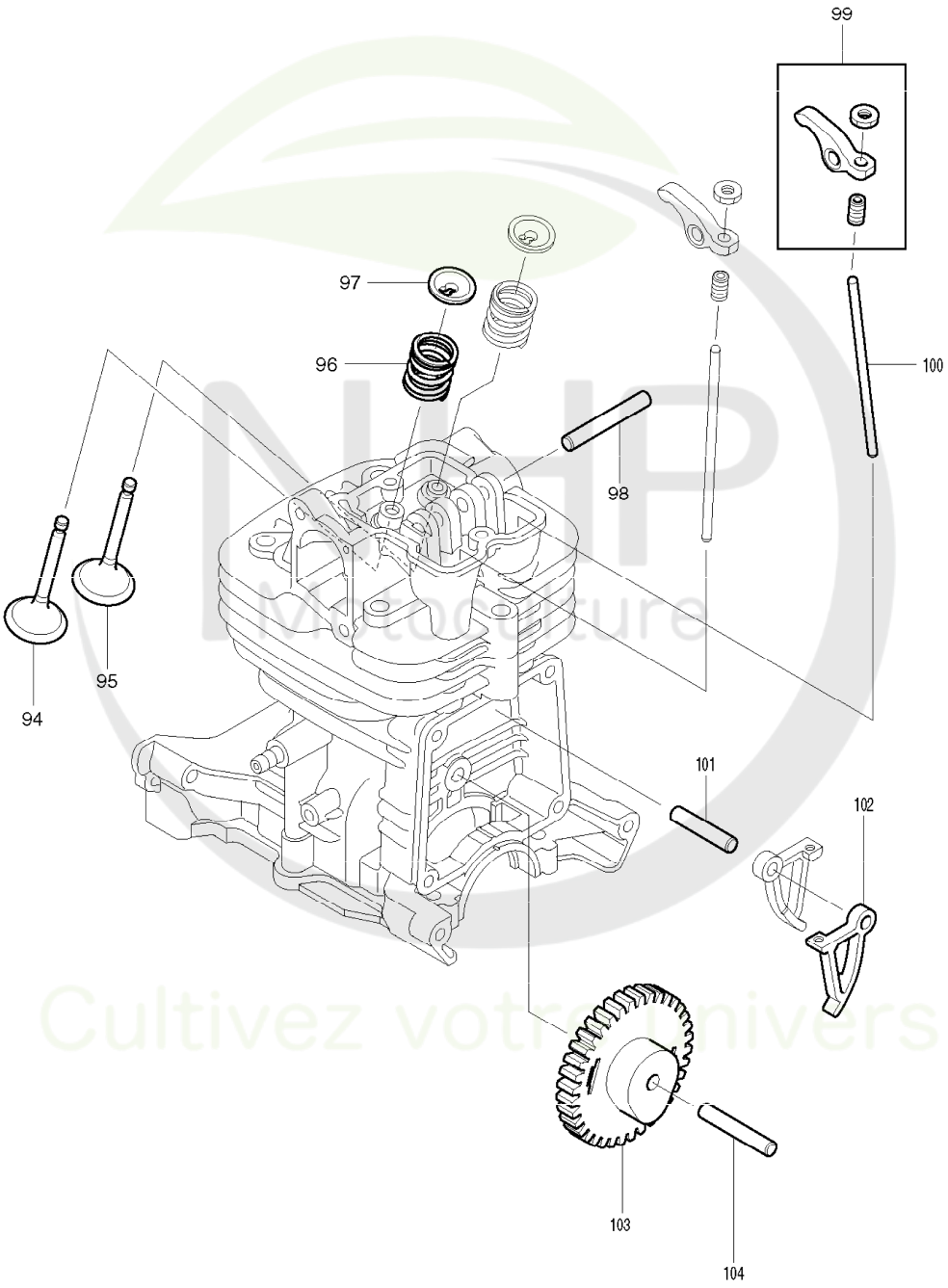

SERVICE DRAWING

MODEL NO. PB76004

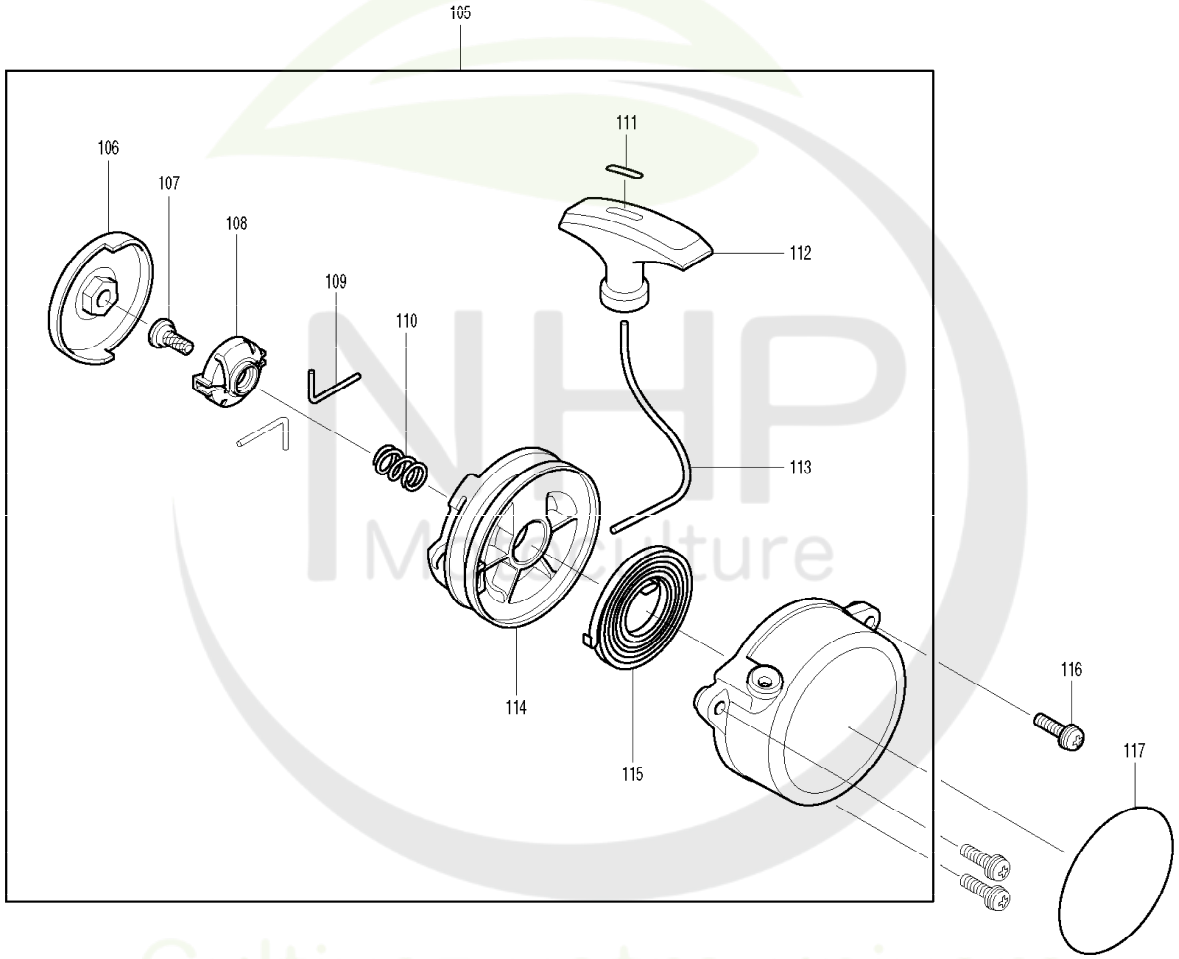

NHP Motoculture
Cultivez votre univers

SERVICE DRAWING

MODEL NO. PB76004

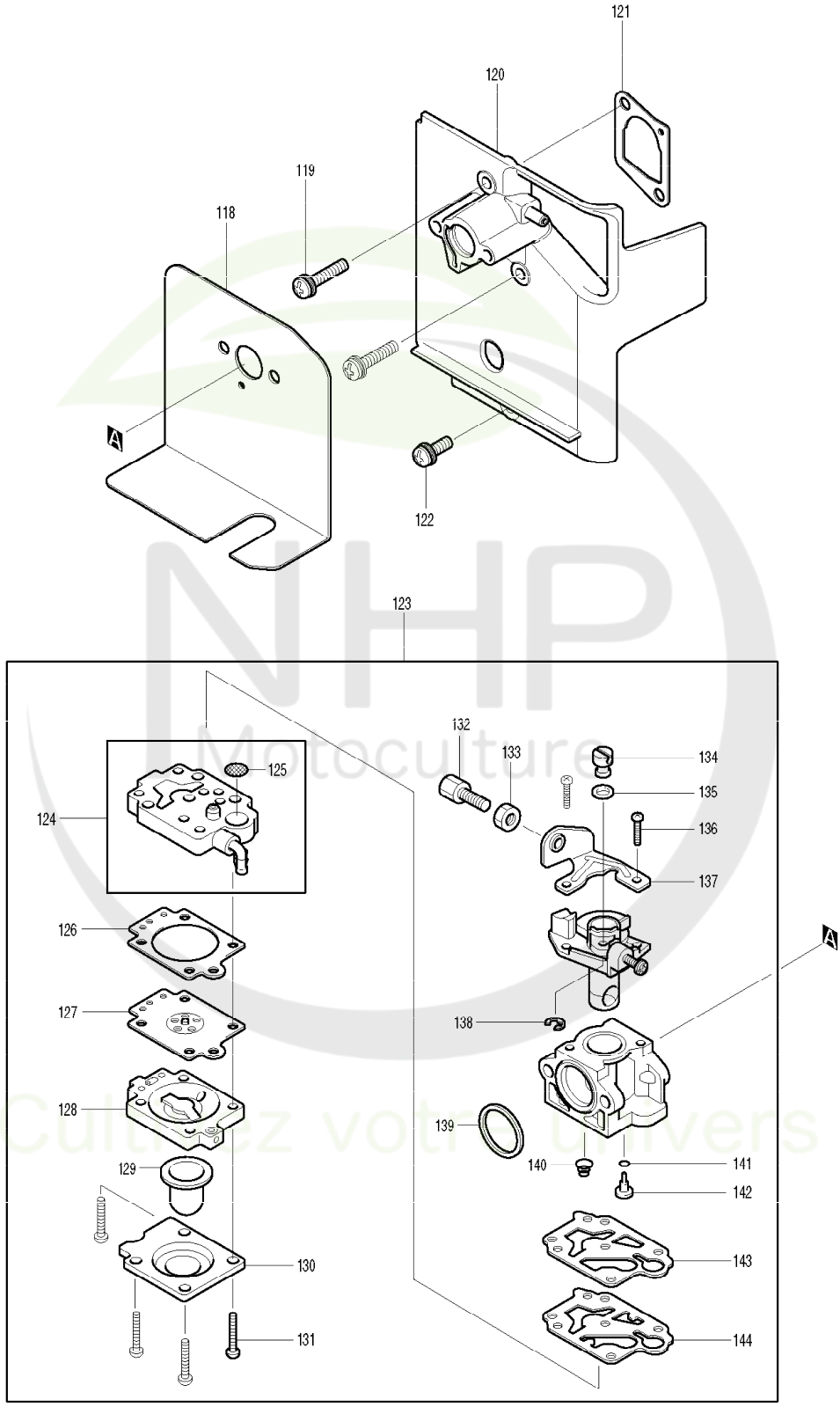

SERVICE DRAWING

MODEL NO. PB76004

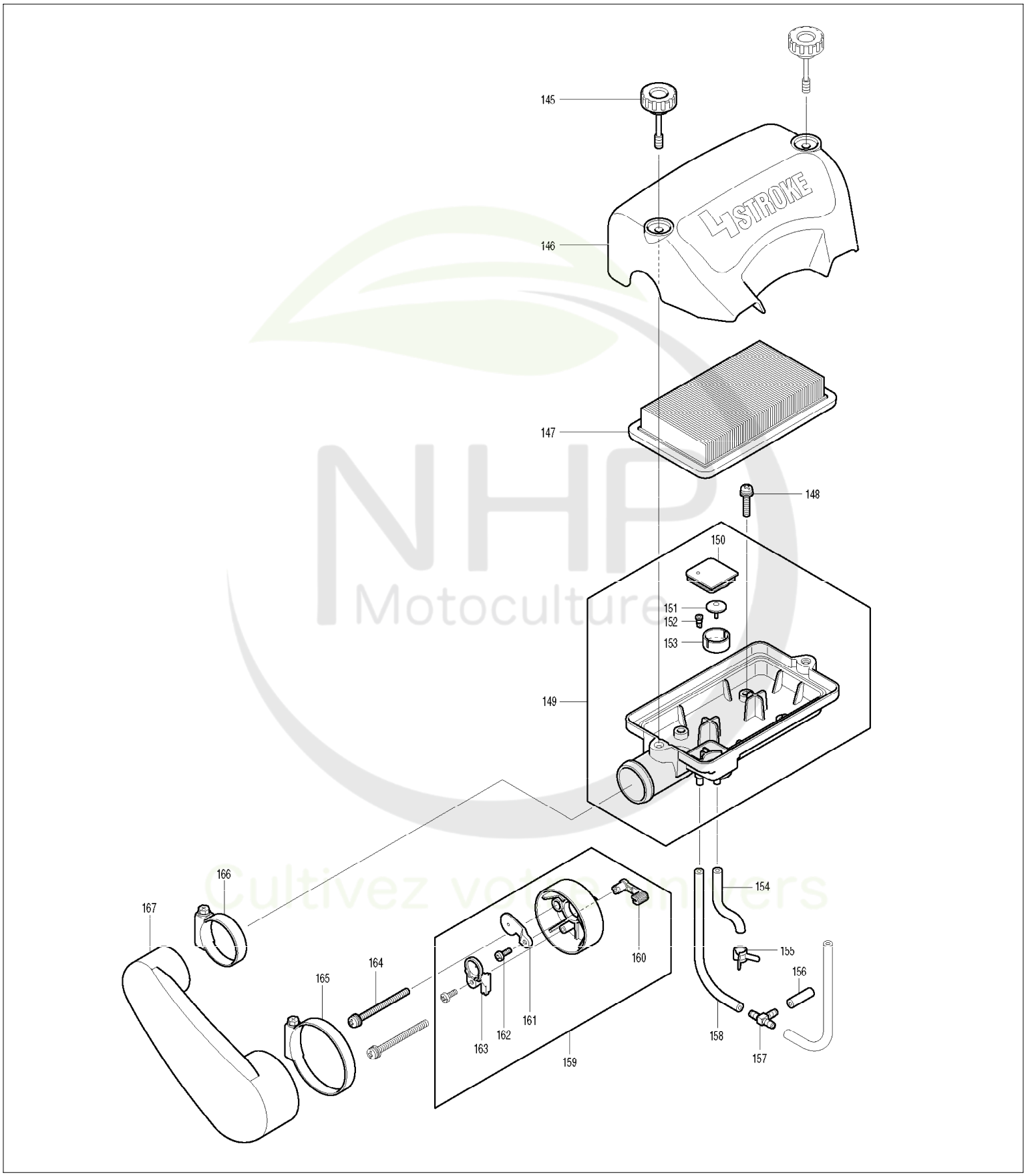

NHP Motoculture
Cultivez votre bonheur

SERVICE DRAWING

MODEL NO. PB76004

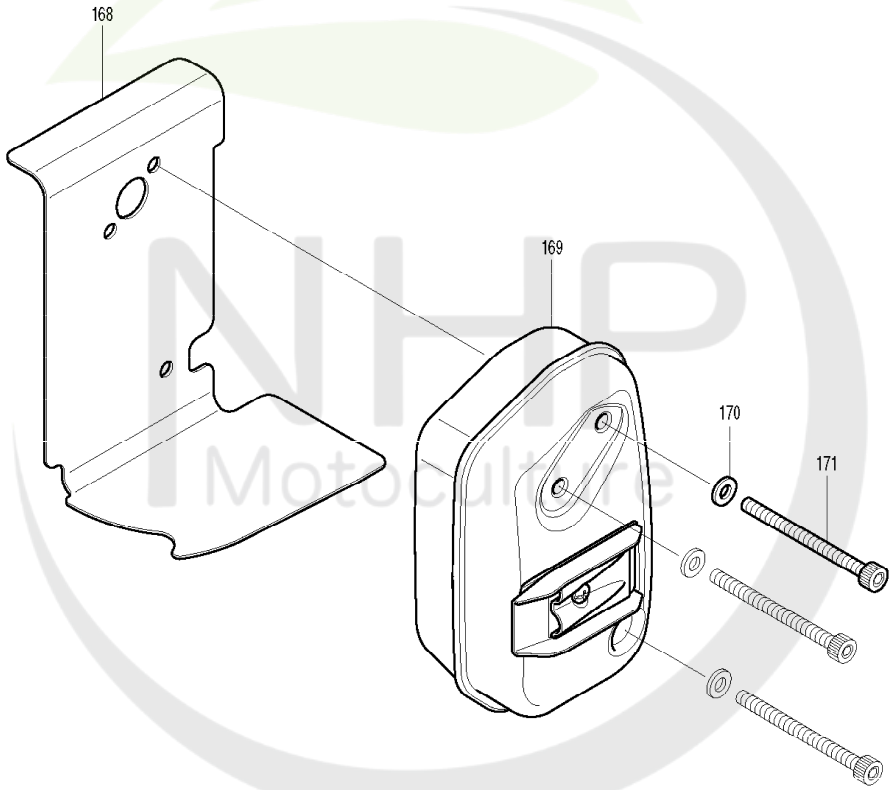

NHP Motoculture
Cultivez votre univers

SERVICE DRAWING

MODEL NO. PB76004

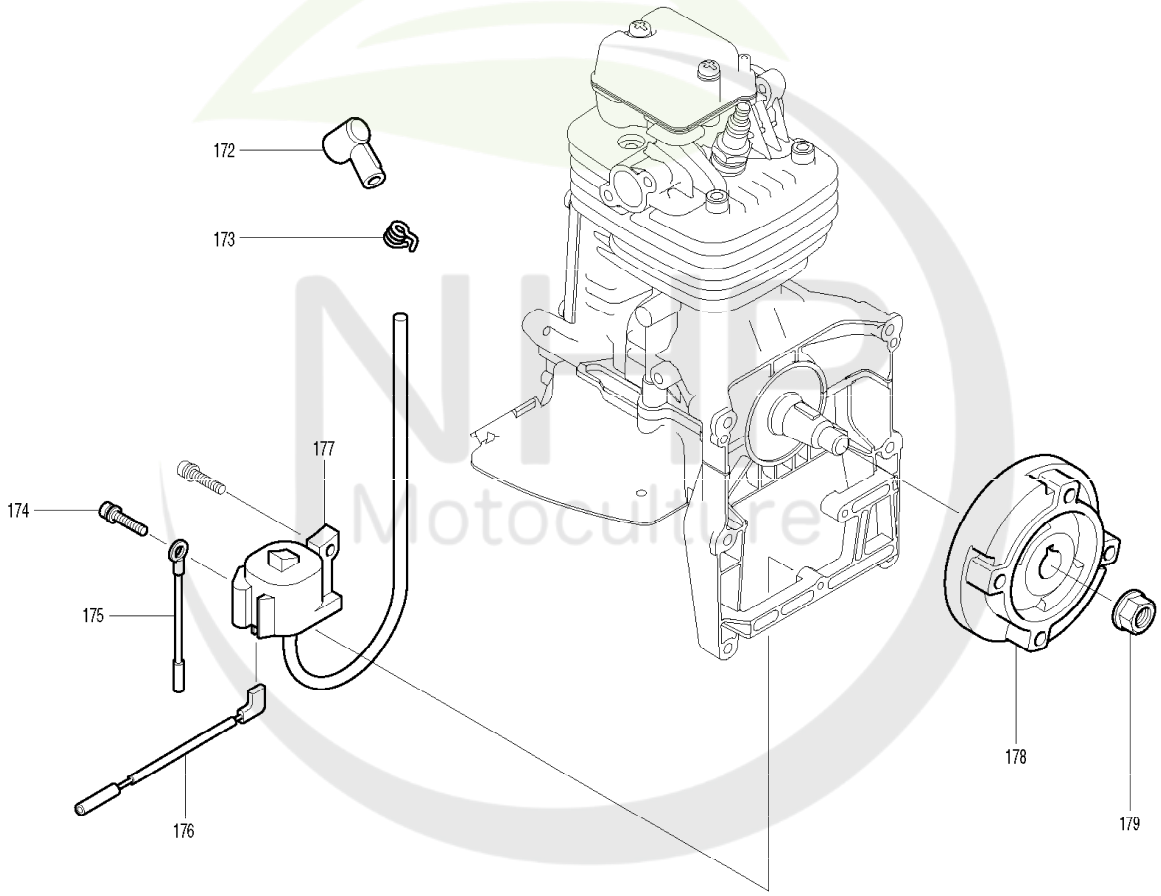

Cultivez votre univers

SERVICE DRAWING

MODEL NO. PB76004

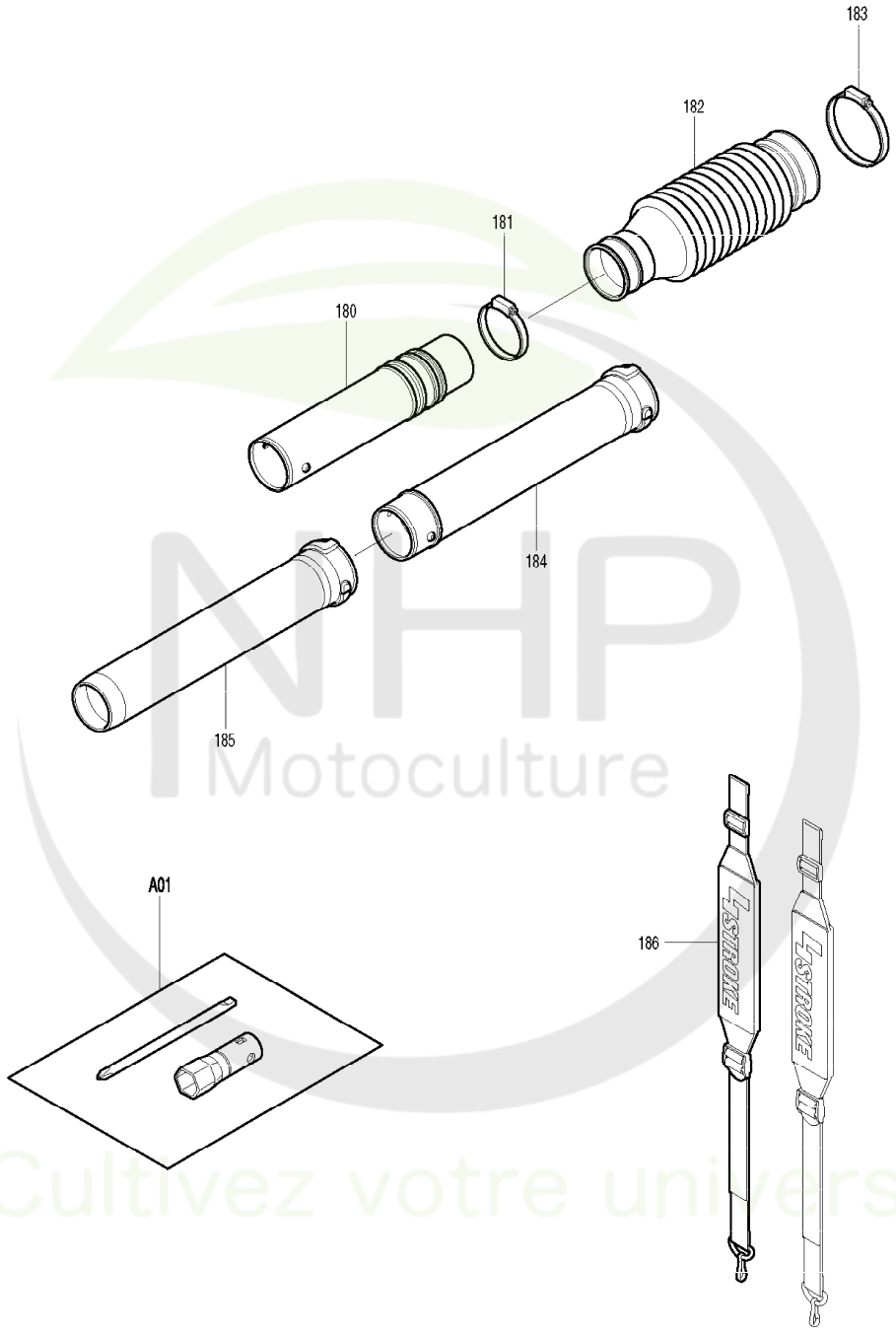

NHP Motoculture
Cultivez votre univers

SERVICE DRAWING

MODEL NO. PB76004

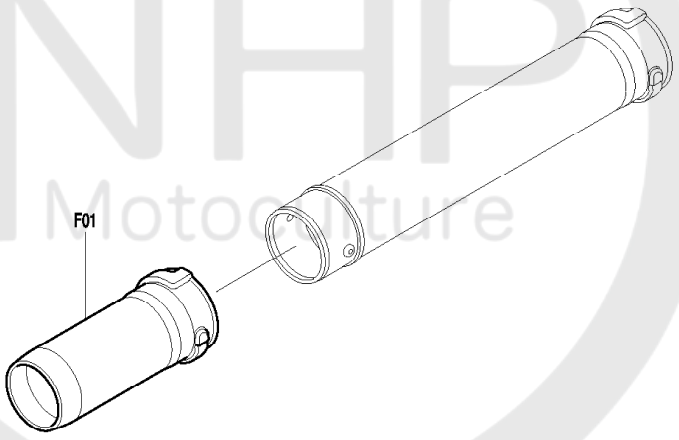

NHP Motoculture
Cultivez votre univers

SPARE PARTS LIST

MODEL NO. PB76004

ITEM	PART NO.	DESCRIPTION	QTY	NOTE
001	**********	******************************	***	******************************
002	6671005010	SQUARE NUT	2	
003	0140059220	SCREW ASSY M5X65 (W.SW)	2	
004	6671002000	DAMPER 1 COMPL	1	
005	0200059910	WASHER M5	1	
006	0043105400	PAN HEAD SCREW M5X40	1	
007	0150059730	TAPPING SCREW 5X25	3	
008	6671001000	INLET COVER COMPL	1	
009	0150059760	TAPPING SCREW 5X16	9	
010	6671003000	DAMPER 2 COMPL	2	
011	0119069690	SOCKET HEAD BOLT M6X40 (W.SW)	4	
012	6671004000	IMPELLER COMPL	1	
013	0563379990	WIRE BAND	1	
014	6671500400	ELBOW	1	
015	0240989990	O RING	1	
016	0119069680	SOCKET HEAD BOLT M6X30 (W.SW)	6	
017	6671500200	BASE 1	1	
018	6671500300	BASE 2	1	
019	**********	******************************	***	******************************
020	6671005010	SQUARE NUT	2	
021	0170059950	NUT M5	2	
022	0736289980	CAUTION LABEL	1	
023	0150049820	TAPPING SCREW 4X6	1	
024	6676500700	MUFFLER GUARD	1	
025	0736309870	LABEL	1	
026	6656500100	PLUG COVER	1	
027	0150059760	TAPPING SCREW 5X16	4	
028	6676500100	OIL GUARD	1	
029	6419504300	CHOKE LABEL	1	
030	**********	******************************	***	******************************
031	0851159861	TUBE	1	
032	5316503300	BREATHER	1	
033	5926017000	FUEL TANK CAP ASSY	1	
034	0851339960	TUBE	1	
035	0561059990	HOSE CLAMP	1	
036	5806502900	FILTER	1	
037	6673002001	FUEL TANK COMPL	1	
038	6672500300	ROCK RIVET	4	
039	6672002000	GUARD COMPL	1	
040	0043706120	SCREW ASSY M6X12 (W.SW)	2	
041	0023706000	FLANGE NUT M6	2	
042	6672001000	FRAME COMPL	1	
043	0140059210	SCREW ASSY M5X16 (W.SW)	2	
044	6672500200	ROCK RIVET	6	
045	6672500000	CUSHION	1	
046	6675001001	CONTROL LEVER ASSY	1	
047	6675001010	SOCKET HEAD BOLT M6X20	1	
048	0032206000	WAVE WASHER	1	
049	0031106000	WASHER	1	
050	6625500701	THROTTLE LEVER 2	1	
051	0170069960	NUT	1	
052	6625500601	THROTTLE LEVER 1	1	
053	6625500901	TORSION SPRING	1	
054	6675001030	SCREW M5X25	1	
055	6675004000	SWITCH COMPL	1	

NHP Motoculture
Cultivez votre univers

SPARE PARTS LIST

MODEL NO. PB76004

ITEM	PART NO.	DESCRIPTION	QTY	NOTE
056	6675001020	TAPPING SCREW 4X16	5	
057	0170059950	NUT M5	1	
058	6675500001	CABLE TUBE	1	
059	0630139820	CONTROL CABLE	1	
060	0043605300	SCREW ASS'Y	2	
061	5971500700	ROCKER COVER	1	
062	**********	******************************	***	******************************
063	5971003001	CYLINDER HEAD COMPL	1	
064	**********	******************************	***	******************************
065	0650109950	SPARK PLUG CMR6A	1	
066	0119069670	SOCKET HEAD BOLT M6X35	5	
067	5971007000	CYLINDER BLOCK SET	1	
068	5921501800	CHECK VALVE	2	
069	0119069930	HEX. SOCKET HEAD BOLT M6X30	6	
070	**********	******************************	***	******************************
071	5971500600	CAMGEAR COVER	1	
072	0043605160	SCREW ASS'Y M5X16 (W,SW)	4	
073	6676005000	OIL CAP ASSY	1	
074	0213229980	GASKET	1	
075	5921501000	REED VALVE	1	
076	5931501300	RETAINER PLATE	1	
077	0119049980	SOCKET HEAD BOLT M4X10	1	
078	5976500100	OIL CASE GASKET	1	
079	5976500000	OIL CASE	1	
080	0037008000	ALUMINUM GASKET	1	
081	0016608120	BOLT M8X12	1	
082	0140059680	SCREW M5X25	5	
083	0851109960	TUBE	1	
084	5972003000	PISTON RING SET	1	
085	5972500001	PISTON	1	
086	0440179910	OIL SEAL (S)	1	
087	5802500701	PISTON PIN	1	
088	0565119990	CLIP	2	
089	0610129940	NEEDLE ROLLER BEARING	1	
090	0323049950	WOODRUFF KEY	1	
091	5972500800	CLIP	1	
092	0440209890	OIL SEAL (L)	1	
093	5972002001	CRANKSHAFT COMPL	1	
094	5973500100	INTAKE VALVE	1	
095	**********	******************************	***	******************************
096	5973500301	VALVE SPRING	2	
097	5973500400	SPRING RETAINER	2	
098	5973500500	SHAFT	1	
099	5973004000	ROCKER ARM ASSY	2	
100	5973500800	PUSH ROD	2	
101	5973500700	SHAFT	1	
102	5973500601	CAM LIFTER	2	
103	5973002001	CAMGEAR ASSY	1	
104	5933500100	ROCKER SHAFT	1	
105	5975001000	STARTER REWIND	1	
106	5975500000	PULLEY	1	
107	5195002060	SET SCREW	1	
108	5975002040	COLLAR	1	

NHP Motoculture
Cultivez votre univers

SPARE PARTS LIST

MODEL NO. PB76004

ITEM	PART NO.	DESCRIPTION	QTY	NOTE
109	5975002050	SWING ARM	2	
110	5975002030	FRICTION SPRING	1	
111	5315001030	STOPPER	1	
112	5315001020	STARTER KNOB	1	
113	5975002110	STARTER ROPE	1	
114	5975002020	REEL	1	
115	5255040030	SPIRAL SPRING	1	
116	0140059360	SCREW & WASHER ASS'Y	3	
117	6679501701	MODEL LABEL	1	
118	5973501200	CARBURETOR GASKET	1	
119	0140059680	SCREW M5X25	2	
120	5973009001	INSULATOR COMPL	1	
121	5973501100	INSULATOR GASKE	1	
122	0043605140	SCREW ASS'Y M5X14	1	
123	5976001000	CARBURETOR	1	
124	**********	**********	***	**********
125	5016004010	INLET SCREEN	1	
126	5236046040	METERING DIAPHRAGM GASKET	1	
127	5926008010	METERING DIAPHRAGM ASS'Y	1	
128	5236046140	AIR PURGE BODY ASS'Y	1	
129	5246001150	PRIMER PUMP	1	
130	5236046050	PRIMER PUMP COVER	1	
131	5236046010	PUMP COVER SCREW	4	
132	5216008010	CABLE ADJUST SCREW	1	
133	5316005450	CABLE ADJUST NUT	1	
134	5236018040	SWIVEL	1	
135	5426005030	WASHER	1	
136	5246001240	THROTTLE COLLAR SCREW	2	
137	5236052020	BRACKET CABLE	1	
138	5316005120	RING	1	
139	5236018020	RING PACKING	1	
140	5926002020	PUMP SPRING	1	
141	5246001010	O RING	1	
142	5976001020	JET #60	1	
143	5926002040	PUMP GASKET	1	
144	5246001040	PUMP DIAPHRAGM	1	
145	6676501200	KNOB BOLT	2	
146	**********	**********	***	**********
147	**********	**********	***	**********
148	0043605160	SCREW ASS'Y M5X16 (W,SW)	4	
149	**********	**********	***	**********
150	**********	**********	***	**********
151	5316500701	CHECK VALVE	1	
152	5923502400	CHECK VALVE (1)	1	
153	**********	**********	***	**********
154	0851139920	TUBE	1	
155	0561079990	HOSE CLAMP	1	
156	0851029930	TUBE	1	
157	5973502200	JOINT PIPE	1	
158	0851199960	TUBE	2	
159	5973006000	INTAKE CASE ASSY	1	
160	5973501800	CHOKE LEVER	1	
161	5973501700	CHOKE PLATE	1	
162	5973006010	TAPPING SCREW 4X12	2	

NHP Motoculture
Cultivez votre univers

SPARE PARTS LIST

MODEL NO. PB76004

ITEM	PART NO.	DESCRIPTION	QTY	NOTE
163	5973501900	INTAKE PLATE	1	
164	0043605650	SCREW ASS'Y M5X65	2	
165	0561679990	HOSE CLAMP	1	
166	0561439990	HOSE CLAMP	1	
167	**********	******************************	***	******************************
168	5973501301	MUFFLER GASKET	1	
169	5973001001	EXHAUST MUFFLER	1	
170	0200069890	WASHER	3	
171	0119069650	SOCKET HEAD BOLT M6X70	3	
172	5927500100	PLUG CAP	1	
173	0654009931	PLUG CAP SPRING	1	
174	0119049970	SOCKET HEAD BOLT	2	
175	6165500201	WIRE	1	
176	5927011000	WIRE 2	1	
177	5977001010	IGNITION COIL	1	
178	5977001020	FLYWHEEL COMPL	1	
179	0023710000	FLANGE NUT M10	1	
180	6679002000	SWIVEL PIPE COMPL	1	
181	0561769990	HOSE CLAMP	1	
182	6679500000	FLEXIBLE PIPE	1	
183	0561009990	HOSE CLAMP	1	
184	6679501801	STRAIGHT PIPE	1	
185	6679501900	END PIPE	1	
186	6679001000	BAND COMPL	2	
A01	6909059000	TOOL	1	

NHP Motoculture
Cultivez votre univers