Retrouvez cette piece sur nhp-motoculture.fr en cliquant sur la reference

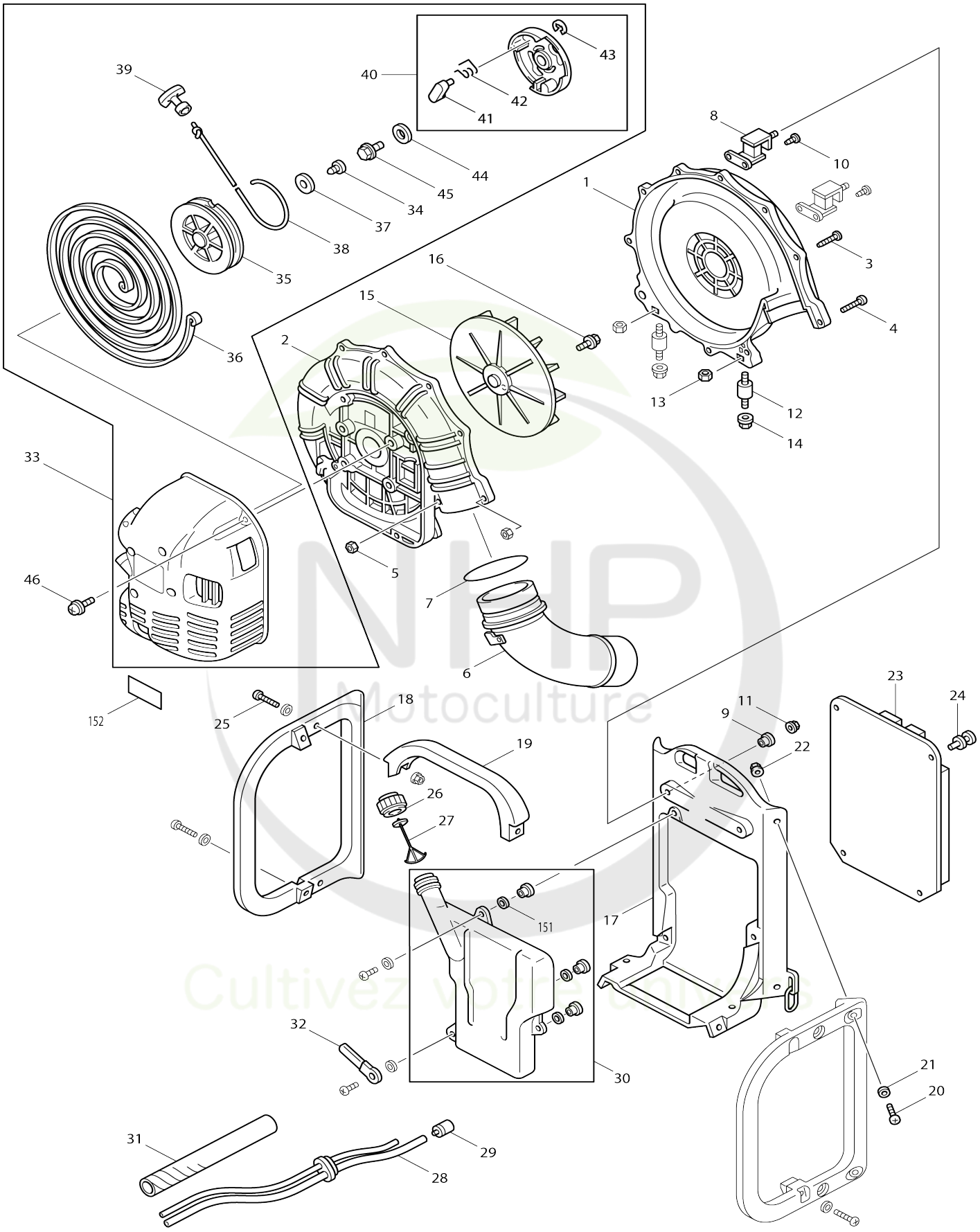

Model No.RBL500 RBL500 => PB500R

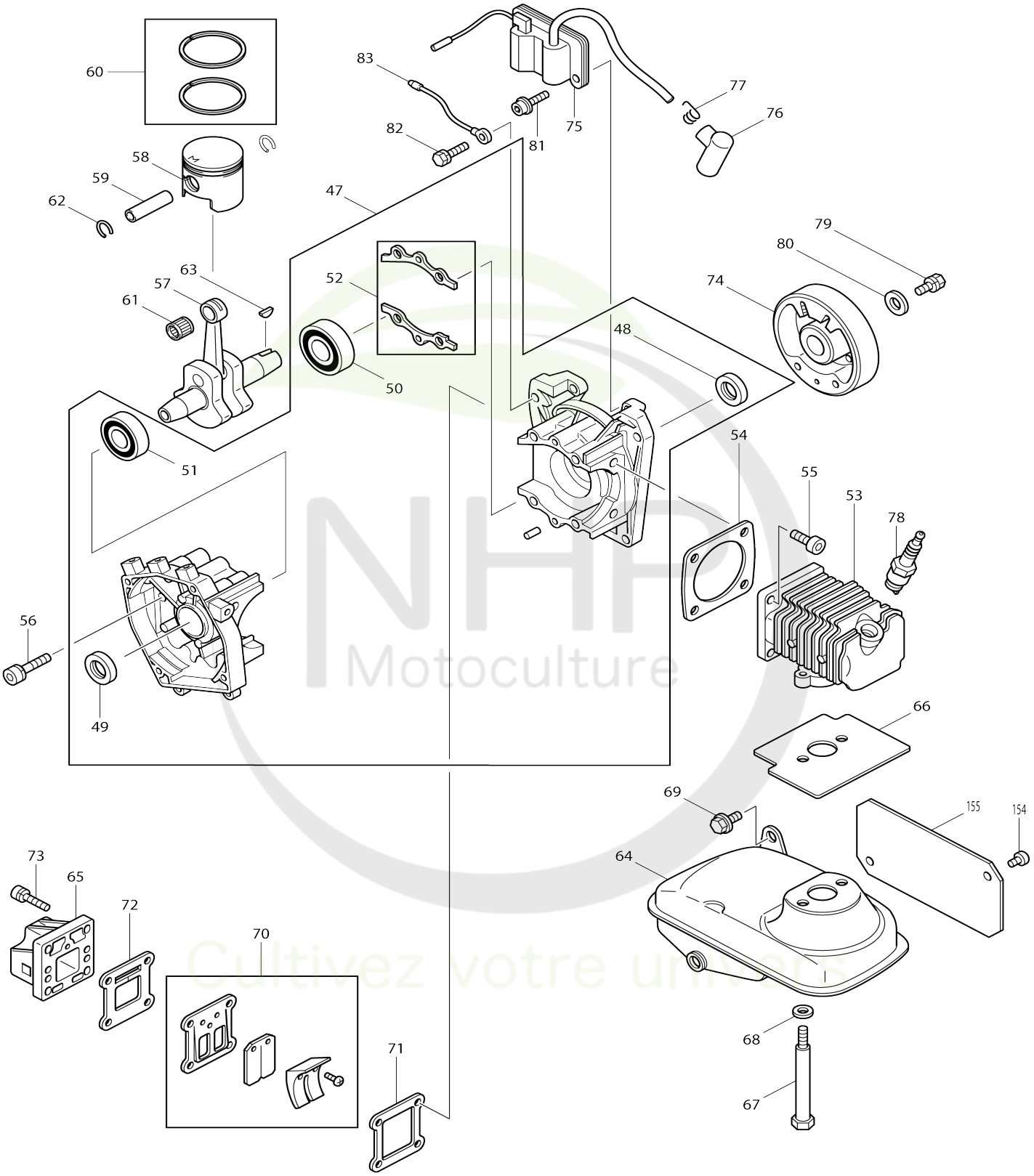

Model No.RBL500 RBL500 => PB500R

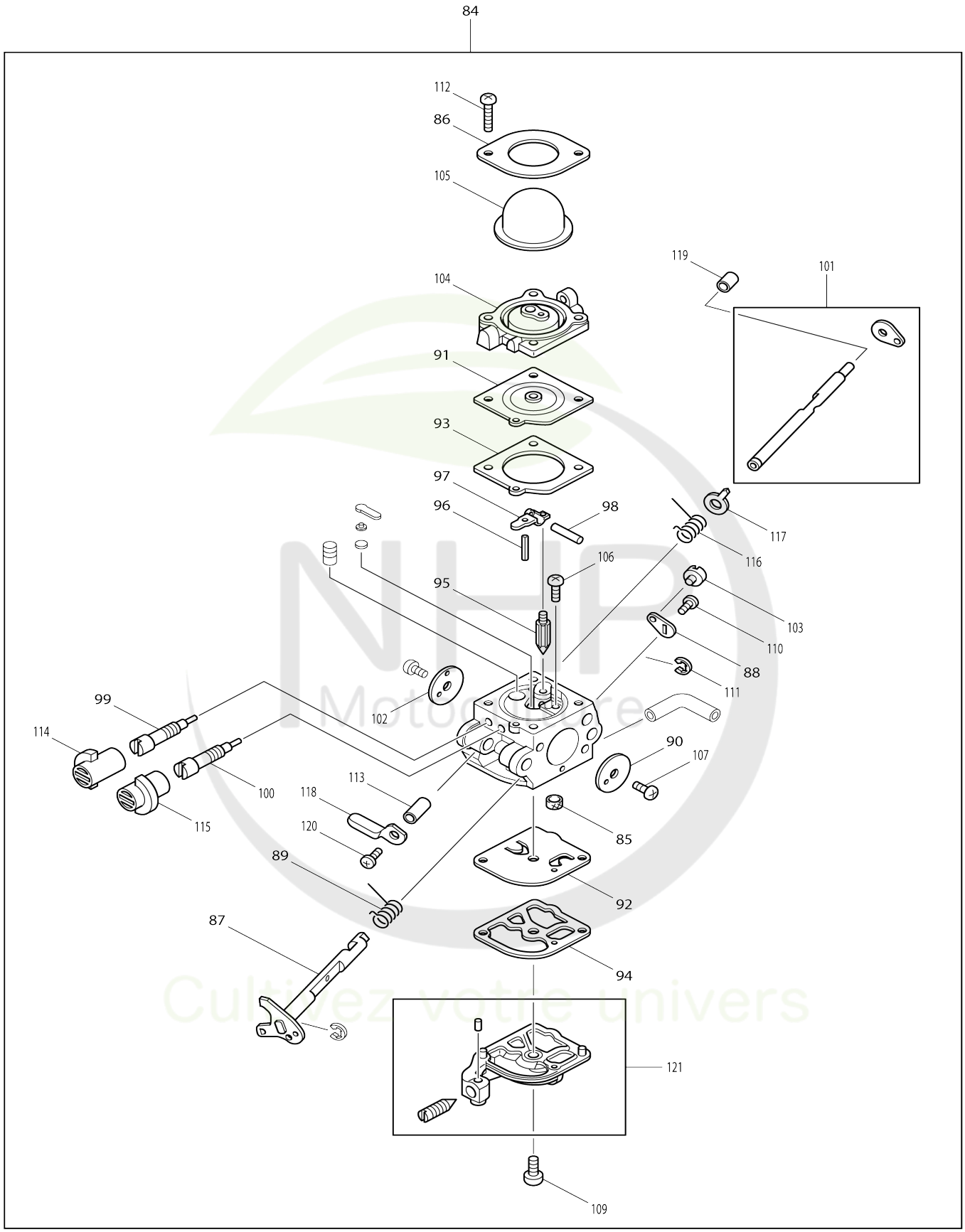

Model No.RBL500 RBL500 => PB500R

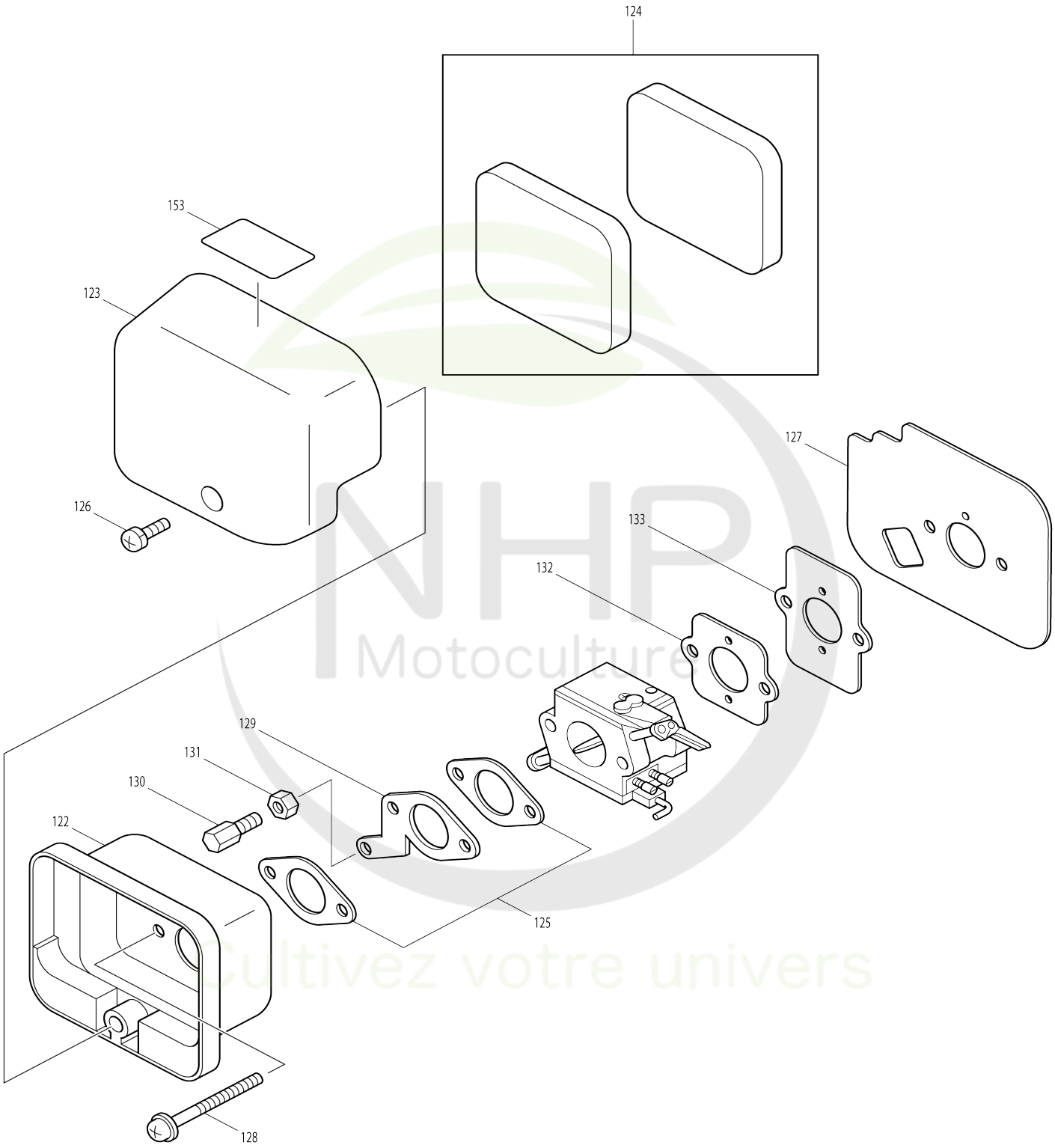

Model No.RBL500 RBL500 => PB500R

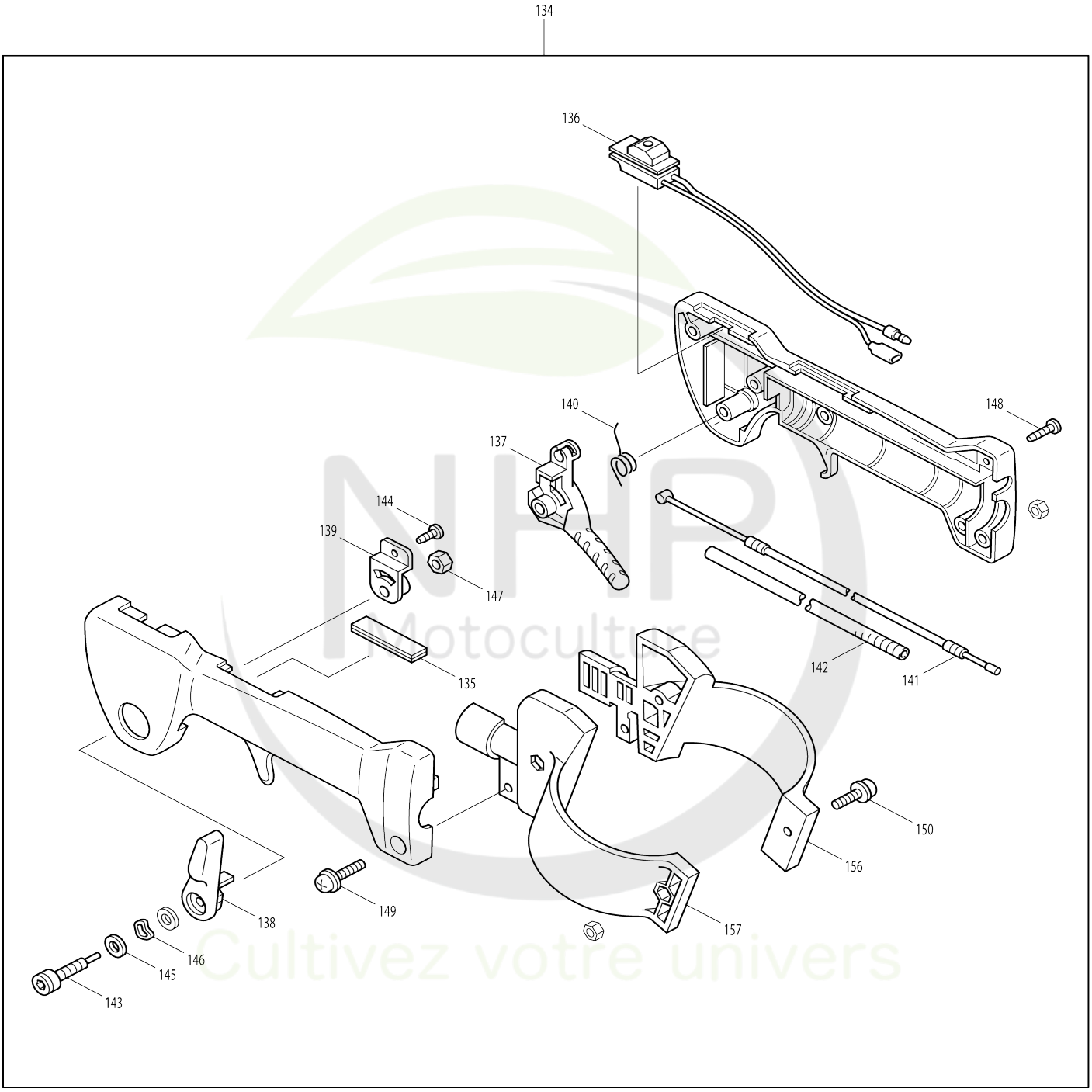

Model No.RBL500 RBL500 => PB500R

Numéro d'article	N ° de pièces	Description	Interchangeabilité	Q'ty	Nouvelle / ancienne	Note 1	Note 2
001	6621500201	VOLUTE CASE 1		1			
002	6621004001	VOLUTE CASE 2 COMPLETE		1	*		
002-1	6621004002	VOLUTE CASE 2 COMPLETE	O	1	*		
002-2	6621004003	VOLUTE CASE 2 COMPLETE	O	1			
003	0150059870	TAPPING SCREW M5X25		10			
004	0043605250	PAN HEAD SCREW M5X25		2	*		
004-1	0043605251	PAN HEAD SCREW M5X25	O	2			
005	0021705000	NUT M5		2	*		
005-1	264086-0	Écrou hexagonal M5	O	2			
006	6621006001	ELBOW COMPLETE		1			
007	0062630850	O RING		1			
008	6621005000	BRACKET COMPLETE		2			
009	6621500300	SPACER		2	*		
009-1	6621500900	SPACER	O	2			
010	0150059910	TAPPING SCREW M5X10		4			
011	0023705000	FLANGE NUT M5		2			
012	6621500401	DAMPER		2			
013	0021706000	NUT M6		2			
014	0023706000	FLANGE NUT M6		2	*		
014-1	264092-5	Écrou à bride M6	O	2			
015	6821500201	IMPELLER		1			
016	0011306250	BOLT & WASHER ASS'Y		3			
017	6622008001	Cadre complet		1			
018	6622500600	SIDE FRAME		2			
019	6622500701	KNOB		1			
020	0043105200	PAN HEAD SCREW M5X20		9	*		
020-1	0140059430	PAN HEAD SCREW M5X25	S	9			
021	0031205000	WASHER		11	*		
022	0023705000	FLANGE NUT M5		11			
023	6622010000	CUSHION		1	*		
023-1	6622010001	CUSHION COMPLETE	O	1			
024	6822500200	LOCK RIVET		4			
025	0043605250	PAN HEAD SCREW M5X25		2	*		
025-1	0140059430	PAN HEAD SCREW M5X25	S	2			
026	5316014000	CAPOT		1	*		
026-1	5256058000	BOUCHON DU RESERVOIR	S	1	*		
026-2	452920-8	Bouchon du réservoir de carburant	O	1			
027	6255021001	STRAP UNIT		1	*		
027-1	6255021002	STRAP UNIT	O	1	*		
027-2	5256067000	BRIDE DU BOUCHON	S	1	*		
027-3	140436-2	Bride du bouchon complet	O	1			
028	6623003001	TUBE		1			
029	5236503900	FILTRE		1	*		
029-1	163447-0	Filtre à essence	O	1	*		
029-2	163447-0	Filtre à essence	O	1			
030	6623500300	FUEL TANK		1	*		
030-1	6623004000	FUEL TANK ASS'Y	O	1	*		

D10		INC. 151					
030-2	6623005000	FUEL TANK ASS'Y	O	1			
D10		INC. 151					
031	8558502200	TUBE		1	*		
031-1	455645-3	Tube en spirale 13-170	O	1			
032	8558501100	LEVIER		1			
033	6628002002	Couvercle du moteur complet		1			
D10		INC. 34-39,40					
034	5105015110	VIS		1			
035	5415003010	REEL		1			
036	5415003020	SPIRAL SPRING		1			
037	5415003030	WASHER		1			
038	5415001140	STARTER ROPE		1	*		
038-1	444030-5	Cable de demarrage	O	1			
039	5305002110	POIGNEE DE DEMARRAGE		1	*		
039-1	140884-5	Poignee de demarrage	O	1			
040	5415011000	PULLEY UNIT		1			
D10		INC. 41-43					
041	5415011010	RATCHET		1			
042	5415011020	RETURN SPRING		1			
043	5215003040	CIRCLIP E		1			
044	0200069920	WASHER M6		1	*		
044-1	267427-9	Rondelle plate 7	O	1			
045	0011306160	BOLT ASS'Y		1			
046	0043606200	SCREW M6X20		8	*		
046-1	265584-7	Boulon à tête cylindrique à six pa ns creux M6X20 WRM	O	8	*		
046-2	265685-1	Vis à tête cylindrique M6X20 WR	<	8			
047	5411007000	CRANKCASE ASS'Y		1	*		
D10		INC. 48-52					
047-1	5411007001	CRANKCASE ASS'Y	O	1	*		
D10		INC. 48-52					
047-2	5411012000	CRANK CASE ASS'Y	O	1			
D10		INC. 48-1,49-52					
048	0440179930	JOINT		1	*		
048-1	0440179920	JOINT	O	1			
049	0440159971	JOINT		1	*		
049-1	0440159950	JOINT	O	1	*		
049-2	213784-3	Joint huile 15	O	1			
050	0600179830	ROULEMENT A BILLES 6203C3		1			
051	0600159880	ROULEMENT A BILLES 6202C3		1	*		
051-1	0600150060	ROULEMENT A BILLES 6202C3	O	1	*		
051-2	0600159880	ROULEMENT A BILLES 6202C3	O	1	*		
051-3	210202-2	Roulement à billes 6202	O	1			
052	5411501200	CRANKCASE GASKET		1	*		
052-1	442157-5	Joint carter moteur	O	1			
053	5411501800	CYLINDER		1	*		
053-1	319241-0	Cylindre	O	1			
054	5411500500	CYLINDER GASKET		1	*		
054-1	5411500501	CYLINDER GASKET	O	1	*		
054-2	442156-7	Joint du cylindre	O	1			
055	0119069990	HEX. SOCKET HEAD BOLT M6X18		4			

NHP Motoculture
Cultivez votre univers

056	0119059940	HEX. SOCKET HEAD BOLT M5X30		4			
057	5412024000	CRANKSHAFT COMPLETE		1	*		
057-1	144400-5	Vilebrequin complet	O	1			
058	5412500700	PISTON		1	*		
058-1	319442-0	Piston	O	1			
059	5602501100	PISTON PIN		1			
060	5602500900	PISTON RING		2			
061	0610129950	ROULEMENT A AIGULLES		1			
062	0565119990	CLIP		2	*		
062-1	233995-4	Jonc de retenue 12	O	2			
063	0053203101	WOODRUFF KEY		1			
064	5413045001	EXHAUST MUFFLER		1	*		
064-1	5413045002	MUFFLER	O	1	*		
064-2	5413045003	MUFFLER	O	1	*		
064-3	168890-8	Silencieux d'échappement	O	1			
065	5413046001	INSULATER COMPLETE		1	*		
065-1	5413046002	Isolant complet	O	1			
066	5413501700	MUFFLER GASKET		1			
067	5413502001	BOLT M6X13		2			
068	0200099990	WASHER M6		2			
069	0011506160	BOLT M6X16		1			
070	5413036000	LEAD VALVE ASS'Y		1			
071	5413502800	BRACKET GASKET		1	*		
071-1	442160-6	Joint du carter	O	1			
072	5403500600	INSULATER GASKET		1	*		
072-1	442189-2	Joint d'isolant	O	1			
073	0119059630	SOCKET HEAD BOLT M5X20		4	*		
073-1	266903-0	Boulon à tête cylindrique à six pa ns creux M5X20 WR	<	4			
074	5417021010	FLYWHEEL		1			
075	5417024021	COIL		1			
076	0655009940	CAPUCHON		1			
077	0654009931	RESSORT DE CAPUCHON DE BOU GIE		1	*		
077-1	324891-8	Ressort de bouchon de bougie	O	1			
078A_	0650149661	BOUGIE DALLUMAGE		1	*		
078A1	168648-5	Bougie d’allumage (BPMR7A)	O	1			
079	0011308160	BOLT & WASHER ASS'Y		1			
080	0031108000	WASHER		1	*		
080-1	941201-0	Rondelle plate 8	O	1			
081	0119059790	SOCKET HEAD BOLT		2			
082	0011306250	BOLT & WASHER ASS'Y		4			
083	6628003000	WIRE COMPLETE		1			
084	5416043001	CARBURETOR		1	*		
D10		INC. 85-121					
084-1	5416043002	CARBURETOR	O	1	*		
D10		INC. 85-121					
084-2	5416043003	CARBURETOR	O	1			
D10		INC. 85-107,109-121					
085	5416043430	STRAINER		1			
086	5416043460	RETAINER		1	*		
086-1	5416043860	RETAINER	S	1			

087	5416043020	THROTTLE SHAFT ASS'Y		1			
088	5416043520	THROTTLE LEVER		1			
089	5416043030	THROTTLE RETURN SPRING		1			
090	5416043040	THROTTLE VALVE		1			
091	5416043260	DIAPHRAGM ASS'Y		1			
092	5416043110	PUMP DIAPHRAGM		1			
093	5416043310	METERING CHAMBER GASKET		1			
094	5416043120	PUMP GASKET		1			
095	5416043210	INLET NEEDLE VALVE		1			
096	5416043220	METERING LEVER SPRING		1			
097	5416043230	METERING LEVER		1			
098	5416043240	PIN		1			
099	5416043350	MAIN MIXTURE SCREW		1			
100	5416043360	IDLE MIXTURE SCREW		1			
101	5416043550	CHOKE SHAFT ASS'Y		1	*		
101-1	5416043551	CHOKE SHAFT ASS'Y	S	1			
102	5416043620	CHOKE VALVE		1			
103	5416043540	POST		1			
104	5416043320	PRIMER BASE ASS'Y		1	*		
104-1	5416043920	PRIMER BASE ASS'Y	S	1			
105	5416043510	SYRINGE		1			
106	5416043250	SCREW		1			
107	5416043050	SCREW		2			
109	5416043160	SCREW M4X10		1			
110	5416043530	SCREW M3X4		1			
111	5416043060	E RING		2			
112	5416043330	RETAINER SCREW		2	*		
112-1	5416043910	RETAINER SCREW M3X12	S	4			
113	5416043720	E RING		1	*		
113-1	5416043850	COLLAR	S	1			
114	5416043760	TAPER RESIST LIMITER (R)		1			
115	5416043810	TAMPER RESIST LIMITER (W)		1			
116	5416043640	CHOKE RETURN SPRING		1			
117	5416043560	CHOKE CONTROL LEVER		1			
118	5416043660	CHOKE LEVER		1			
119	5416043610	CHOKE SHAFT COLLAR		1			
120	5416043710	CHOKE LEVER SCREW M3X4		1			
121	5416043820	PUMP COVER KIT		1			
122	5413048001	CLEANER PLATE ASS'Y		1			
123	5413507001	AIR CLEANER CASE		1			
124	5413507101	AIR CLEANER ELEMENT		2			
125	5413507200	AIR CLEANER GASKET		2			
126	0043605140	SCREW ASS'Y M5X14		1			
127	5416504302	CARBURETOR GASKET		1			
128	0043605550	SCREW ASSY M5X55 W/SW		2	*		
128-1	266877-5	Vis à tête cylindrique M5X55 WR	O	2	*		
128-2	911278-9	Vis à tête cylindrique M5X55 WR	O	2			
129	5416504600	CABLE BRACKET		1	*		
129-1	347342-4	Fixation cable	O	1			
130	5216008010	Régler la vis		1	*		
130-1	266795-7	Régler la vis	O	1			
131	0022706000	NUT M6		1			

NHP Motoculture
Entrez votre univers

132	5413507900	CARBURETOR GASKET		1			
133	5413507800	PLATE		1			
134	6625001002	CONTROL LEVER ASS'Y		1	*		
D10		INC. 135-150					
D20		INC. 135-150,156,157					
134-1	6625001003	CONTROL LEVER ASS'Y	O	1			
D20		INC. 135-150,156,157					
135	6625500500	CASE COVER		1			
136	6625003001	SWITCH COMPLETE		1	*		
136-1	632C00-6	Interrupteur complet	O	1			
137	6625500601	THROTTLE LEVER 1		1	*		
137-1	453716-0	Levier 1 d'accélération	O	1			
138	6625500701	THROTTLE LEVER 2		1	*		
138-1	453717-8	Levier 2 d'accélération	O	1			
139	6625004000	PLATE COMPLETE		1			
140	6625500901	TORSION SPRING		1	*		
140-1	233602-9	Ressort de torsion 9	O	1			
141	0630139901	CABLE DE CONTROLE		1			
142	6625501001	CABLE TUBE		1			
143	6625501700	SOCKET HEAD BOLT M6X30		1			
144	0150049970	TAPPING SCREW		1			
145	0031106000	WASHER		2			
146	0032206000	WAVE WASHER		1	*		
146-1	267841-9	Rondelle ondulée 7	O	1			
147	0022706000	NUT M6		1			
148	0150049940	TAPPING SCREW M4X16		4	*		
148-1	265A17-8	Vis taraudeuse 4X16	O	4			
149	0043605250	PAN HEAD SCREW M5X25		1			
150	0043105200	PAN HEAD SCREW M5X20		2			
151	0200069920	WASHER M6		3	*		
151-1	267427-9	Rondelle plate 7	O	3	*		
151-2	261162-1	Une rondelle en caoutchouc 8	<	3			
152	6629508600	CAUTION LABEL		1			
153	0736409430	LABEL		1			
154	0140059920	SCREW M5X8		2	*		
154-1	0140059921	SCREW M5X8	O	2	*		
154-2	266572-7	Vis à tête poutre en treillis M5X8	O	2			
155	5413506001	TANK PROTECTOR		1			
156	6625500802	HANDLE HOLDER 1		1			
157	6625005002	HANDLE HOLDER 2		1			
A01	6629021000	BAND SET		2	*		
A01-1	6709026000	BAND COMPL	O	2	*		
A01-2	6709026001	BAND COMPL	O	2	*		
A01-3	161884-2	Lanière complète	O	2			
A02	6629019000	HOSE CLAMP		1			
A03	6629020000	HOSE CLAMP		1			
A04	6989506900	FLEXIBLE PIPE		1			
A05	6709017010	PIPE 1		1			
A06	6709017020	PIPE 2		1			
A07	6629506700	END PIPE		1			
A08	5019001000	CLE COMBINEE		1			

NHP
Motoculture
Cultivez votre univers