Retrouvez cette piece sur nhp-motoculture.fr en cliquant sur la reference

Model No.AT1826 260MM CORDLESS STRING TRIMMER

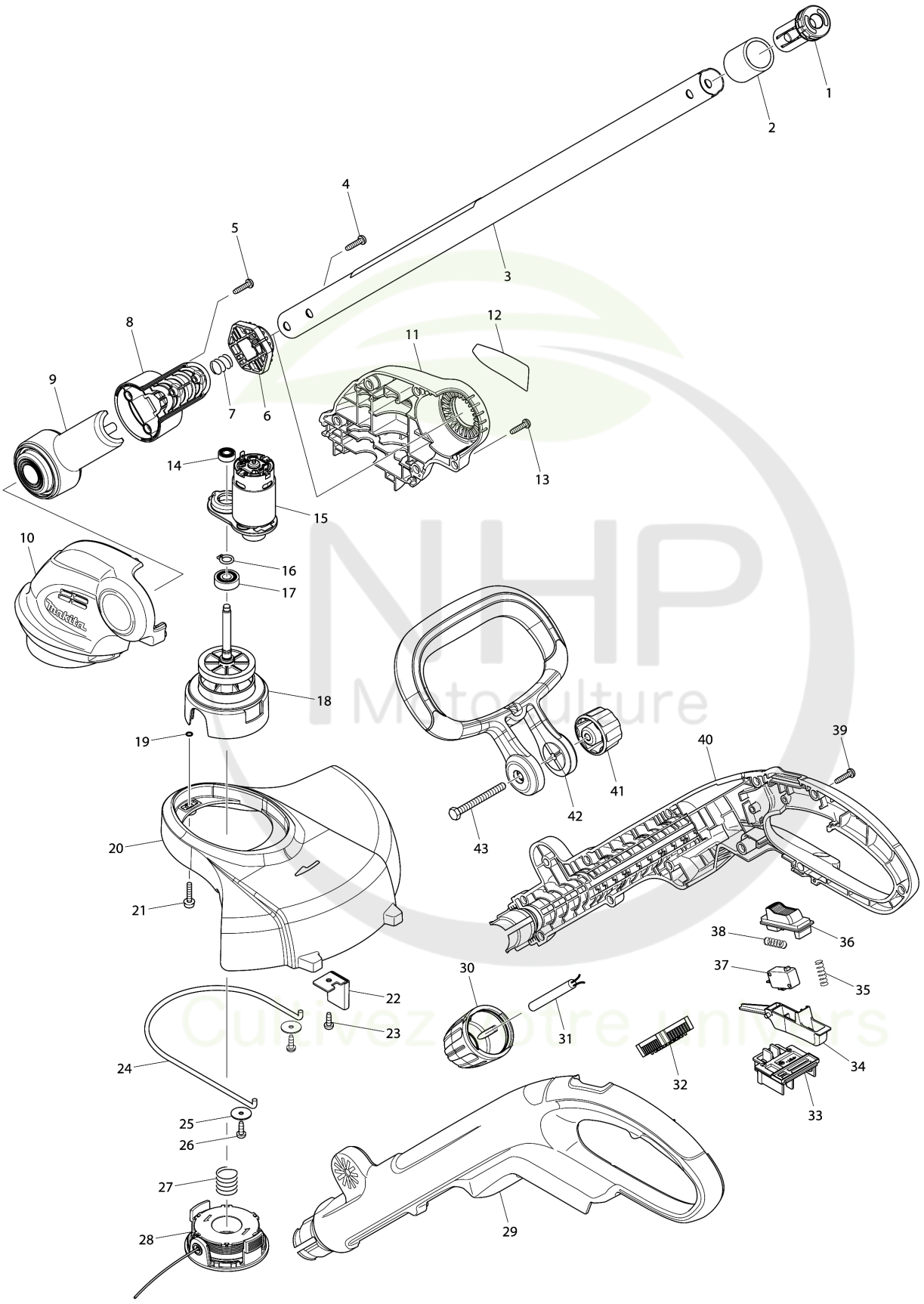

Model No.AT1826 260MM CORDLESS STRING TRIMMER

Item	Parts No.	Description	I/C	Qty	New/Old	Opt. 1	Opt. 2	Note
001	453357-2	PIPE CAP		1				
002	422089-2	RUBBER SLEEVE 25		1				
003	141339-3	PIPE25 COMPLETE		1				
C10	890862-2	CAUTION LABEL		1				
004	265995-6	TAPPING SCREW 4X18		2				
005	265995-6	TAPPING SCREW 4X18		2				
006	451896-6	LOCK OFF BUTTON B		1				
007	231113-8	COMPRESSION SPRING 12		1				
008	188870-8	PIPE HOLDER SET		1				
D10		INC. 9						
009	188870-8	PIPE HOLDER SET		1				
D10		INC. 8						
010	187410-9	MOTOR HOUSING SET		1	*			
C10	263002-9	RUBBER PIN 4		2	*			
C20	263005-3	RUBBER PIN 6		2	*			
C30	931102-0	HEX. NUT M4		2	*			
D10		INC. 11			*			
010-1	187410-9	MOTOR HOUSING SET	O	1				
C10	263002-9	RUBBER PIN 4		2				
C20	263005-3	RUBBER PIN 6		2				
C30	931102-0	HEX. NUT M4		2				
D10		INC. 11						
011	187410-9	MOTOR HOUSING SET		1	*			
C10	263002-9	RUBBER PIN 4		2	*			
C20	263005-3	RUBBER PIN 6		2	*			
C30	931102-0	HEX. NUT M4		2	*			
D10		INC. 10			*			
011-1	187410-9	MOTOR HOUSING SET	O	1				
C10	263002-9	RUBBER PIN 4		2				
C20	263005-3	RUBBER PIN 6		2				
C30	931102-0	HEX. NUT M4		2				
D10		INC. 10						
012	896751-9	AT1826 NAME PLATE		1				
013	265995-6	TAPPING SCREW 4X18		5				
014	210006-2	BALL BEARING 696ZZ		1				
015	629932-8	DC MOTOR		1				
016	961004-6	RETAINING RING S-8		1				
017	211032-4	BALL BEARING 608ZZ		1				
018	141338-5	GEAR SHAFT COMPLETE		1				
C10	227283-9	SPUR GEAR 48		1				
C20	266744-4	+ PAN HEAD SCREW M4X8		1				
C30	326159-8	GEAR SHAFT		1				

Model No.AT1826 260MM CORDLESS STRING TRIMMER

Item	Parts No.	Description	I/C	Qty	New/Old	Opt. 1	Opt. 2	Note
C40	453360-3	SPOOL HOLDER		1				
019	213023-1	O RING 4		2				
020	453356-4	SAFETY COVER		1				
021	911139-3	PAN HEAD SCREW M4X20 WG		2				
022	123169-4	CORD CUTTER ASSEMBLY		1				
023	266020-6	TAPPING SCREW 4X12		1				
024	326128-9	WIRE GUARD		1				
025	267071-2	FLAT WASHER 4		2				
026	266020-6	TAPPING SCREW 4X12		2				
027	231352-0	COMPRESSION SPRING 17		1				
028	195859-9	SPOOL SET		1				
029	187260-2	HANDLE SET		1				
D10		INC. 40						
030	453344-1	LOCK SLEEVE		1				
031	699058-0	POWER SUPPLY CORD UNIT		1	*			
031-1	660260-2	POWER SUPPLY CORD #16-2-0.2	O	1				
032	620111-1	CONTROLLER		1	*			
032-1	632N05-2	CONTROLLER UNIT	<	1				
033	643862-9	TERMINAL		1				
034	453338-6	SWITCH LEVER		1				
035	233068-3	COMPRESSION SPRING 6		1				
036	453339-4	LOCK OFF LEVER		1				
037	651891-8	SWITCH V-15-3A6		1				
038	233068-3	COMPRESSION SPRING 6		1				
039	265995-6	TAPPING SCREW 4X18		11				
040	187260-2	HANDLE SET		1				
D10		INC. 29						
041	264072-1	THUMB NUT M6		1				
C10	931302-2	HEX. NUT M6		1				
042	453343-3	FRONT GRIP		1				
043	921382-6	HEX. BOLT M6X60		1				
A01	125516-5	BAND ASSEMBLY		1				
A02	195246-2	SAFETY GOGGLE		1	*			
A03	195865-4	NYLON CODE 1.65-15M SET		1				
A04B	***LG18	LG-18 BATTRY CHARGER		1	*			
A04C	***LG18	LG-18 BATTRY CHARGER		1	*			
A04-1B	***DC18WA	DC18WA BATTRY CHARGER	O	1				
A04-1C	***DC18WA	DC18WA BATTRY CHARGER	O	1				
A05B	195766-6	BATTERY AP-18 SET		2	*			
A05-1B	196372-0	BATTERY AP-1813 SET	O	2	*			
A05-1C	196372-0	BATTERY AP-1813 SET		1	*			
A05-2B	196372-0	BATTERY AP-1813 SET	O	2	*			

Please order the parts with part number.

Print Date 26/9/2021

Model No.AT1826 260MM CORDLESS STRING TRIMMER

Item	Parts No.	Description	I/C	Qty	New/Old	Opt. 1	Opt. 2	Note
A05-2C	196372-0	BATTERY AP-1813 SET	O	1	*			
A05-3B	196366-5	BATTERY BL1813G SET	<	2	*			
A05-3C	196366-5	BATTERY BL1813G SET	<	1	*			
A05-4B	198186-3	BATTERY BL1815G SET	<	2				
A05-4C	198186-3	BATTERY BL1815G SET	<	1				
A06B	452652-7	BATTERY COVER		1				
A06C	452652-7	BATTERY COVER		1				
E01	688172-7	LINE FILTER		1				

Please order the parts with part number.

Print Date 26/9/2021

NHP Motoculture
Cultivez votre univers