Retrouvez cette piece sur nhp-motoculture.fr en cliquant sur la reference

Model No.AT-3630 300MM CORDLESS STRING TRIMMER

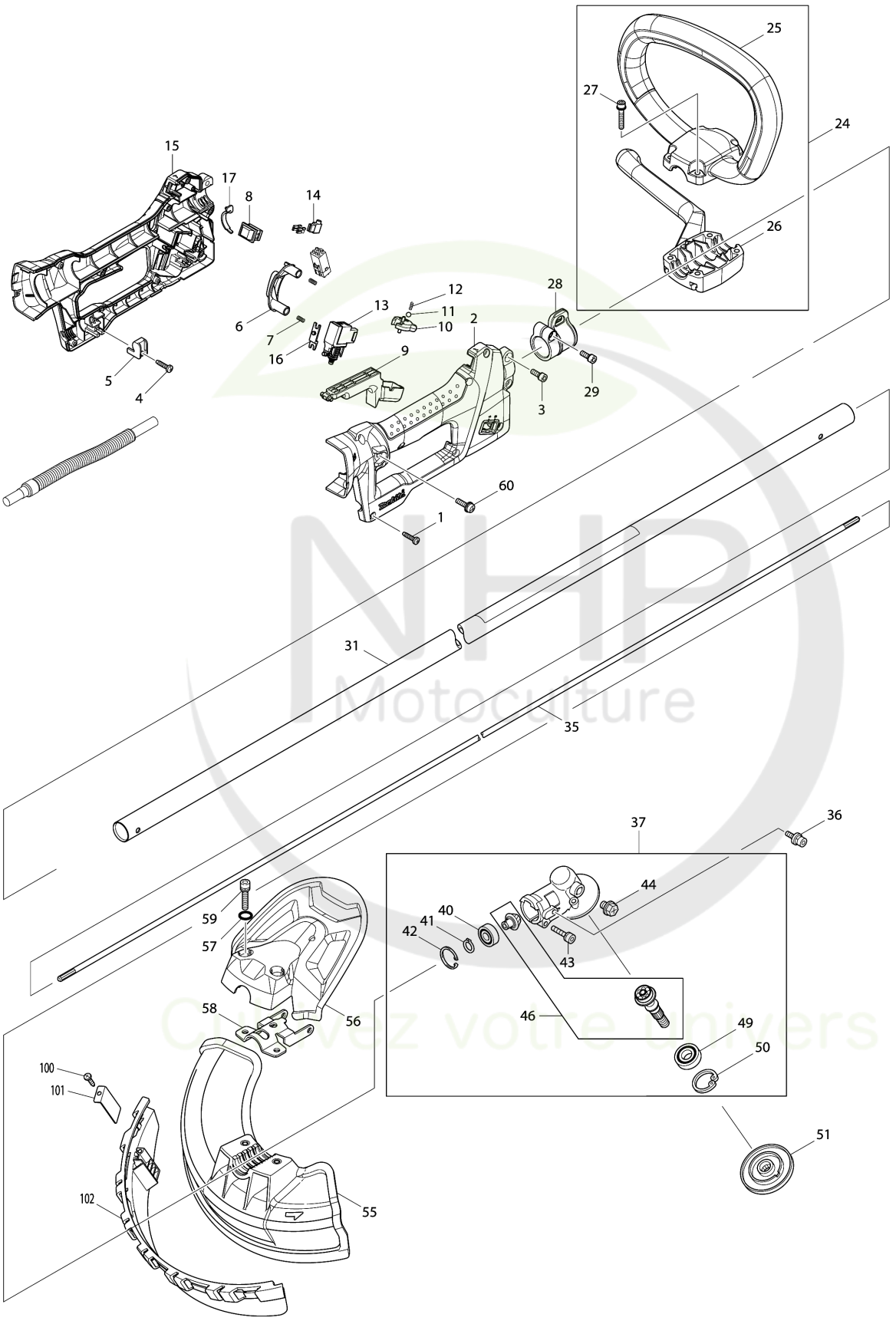

Model No.AT-3630 300MM CORDLESS STRING TRIMMER

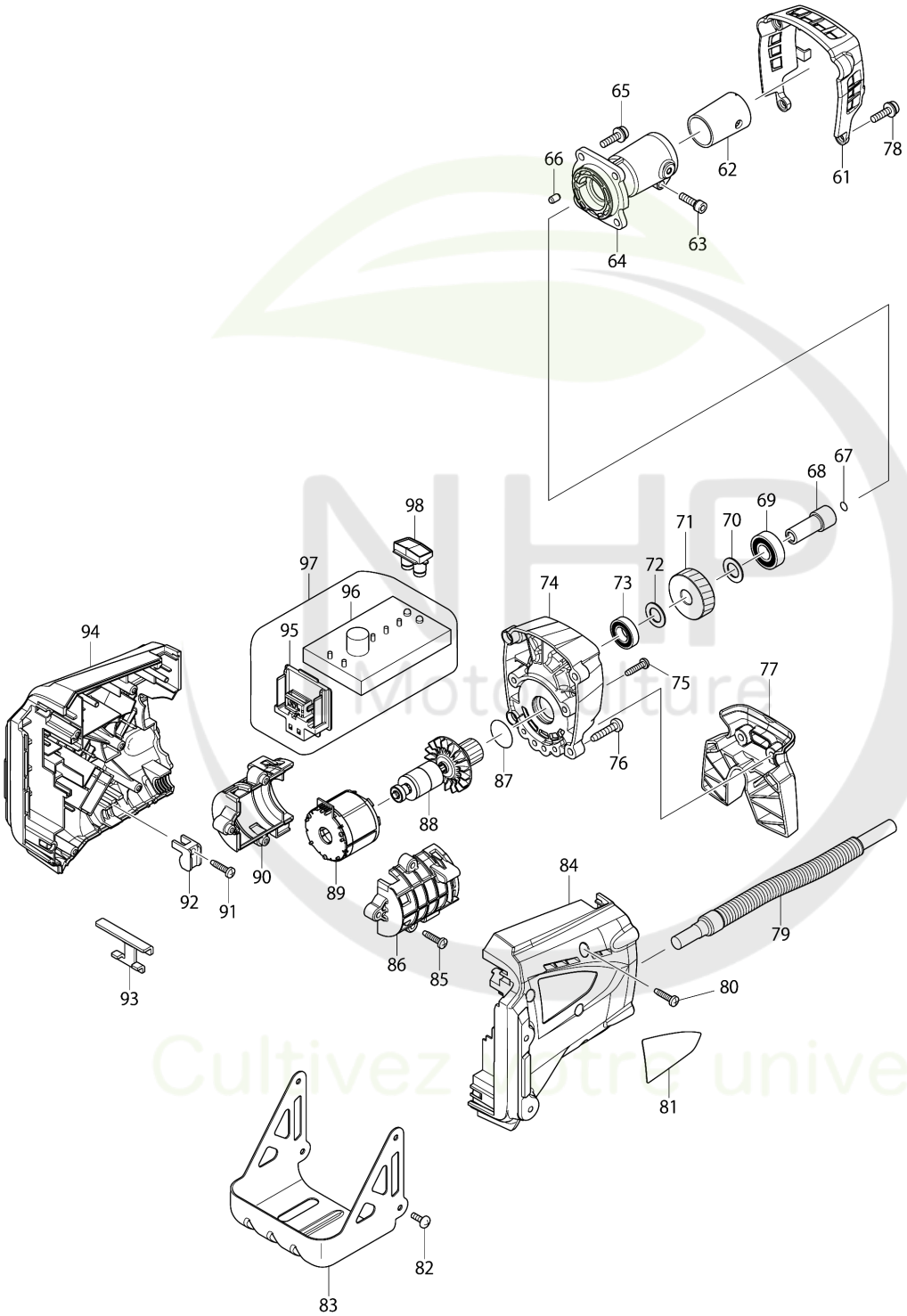

Model No.AT-3630 300MM CORDLESS STRING TRIMMER

Item	Parts No.	Description	I/C	Qty	New/Old	Opt. 1	Opt. 2	Note
001	265995-6	TAPPING SCREW 4X18		8				
002	188840-7	GRIP SET		1				
D10		INC. 15						
003	922228-9	H.S.H.BOLT M5X18 WITH WR		1				
004	265995-6	TAPPING SCREW 4X18		1				
005	687261-5	STRAIN RELIEF		1				
006	451983-1	LOCK OFF BUTTON		1				
007	233054-4	COMPRESSION SPRING 4		2				
008	651533-4	SWITCH SLE6A2-33		1				
009	451984-9	SWITCH LEVER		1				
010	451986-5	INDICATOR		1				
011	216018-3	STEEL BALL 5.0		1				
012	233211-4	COMPRESSION SPRING 2		1				
013	650630-3	SWITCH TGR3-3		1				
014	686015-7	RECEPTACLE SLEEVE		1				
015	188840-7	GRIP SET		1				
D10		INC. 2						
016	451982-3	LINK PLATE		1				
017	451985-7	LEAD COVER		1				
024	195215-3	LOOP HANDLE SET		1				
C10	783014-1	+ SCREW DRIVER 2		1				
C10	783014-1	+ SCREW DRIVER 2		1				
C10	783014-1	+ SCREW DRIVER 2		1				
D10		INC. 25-27						
025	451598-4	LOOP HANDLE 24		1				
026	451599-2	HANDLE CLAMP 24		1				
027	911253-5	PAN HEAD SCREW M5X30		4				
028	168478-4	HANGER		1				
029	922228-9	H.S.H.BOLT M5X18 WITH WR		1				
031A	140284-9	SHAFT PIPE COMPLETE		1	*			
C10	810558-9	CAUTION LABEL		1	*			
031B	140284-9	SHAFT PIPE COMPLETE		1	*			
C10	810558-9	CAUTION LABEL		1	*			
031-1A	141097-1	SHAFT PIPE COMPLETE	<	1	*			
C10	810558-9	CAUTION LABEL		1	*			
C20	893388-3	DOLMAR LOGO LABEL		1	*			
031-1B	141097-1	SHAFT PIPE COMPLETE	<	1	*			
C10	810558-9	CAUTION LABEL		1	*			
C20	893388-3	DOLMAR LOGO LABEL		1	*			
031-2A	141890-3	SHAFT PIPE COMPLETE	<	1				
C10	810558-9	CAUTION LABEL		1				
C20	893388-3	DOLMAR LOGO LABEL		1				

Model No.AT-3630 300MM CORDLESS STRING TRIMMER

Item	Parts No.	Description	I/C	Qty	New/Old	Opt. 1	Opt. 2	Note
C30	808723-2	CAUTION LABEL		1				
031-2B	141890-3	SHAFT PIPE COMPLETE	<	1				
C10	810558-9	CAUTION LABEL		1				
C20	893388-3	DOLMAR LOGO LABEL		1				
C30	808723-2	CAUTION LABEL		1				
031-2I	141890-3	SHAFT PIPE COMPLETE		1				
C10	810558-9	CAUTION LABEL		1				
C20	893388-3	DOLMAR LOGO LABEL		1				
C30	808723-2	CAUTION LABEL		1				
035	325812-3	SHAFT		1				
036	922218-2	H.S.H.BOLT M5X14 WITH WR		2				
037A	125791-3	GEAR CASE ASSY		1	*			
D10		INC. 40-44,46,49,50			*			
037B	125791-3	GEAR CASE ASSY		1	*			
D10		INC. 40-44,46,49,50			*			
037-1A	125556-3	GEAR CASE ASSEMBLY	S	1	*			
C10	346084-7	CLAMP WASHER		1	*			
C20	168526-9	CUP		1	*			
C30	264025-0	HEX. NUT M10-17		1	*			
D10		INC. 40-44,46,49-51			*			
037-1B	125556-3	GEAR CASE ASSEMBLY	S	1	*			
C10	346084-7	CLAMP WASHER		1	*			
C20	168526-9	CUP		1	*			
C30	264025-0	HEX. NUT M10-17		1	*			
D10		INC. 40-44,46,49-51			*			
037-1I	125556-3	GEAR CASE ASSEMBLY		1	*			
C10	346084-7	CLAMP WASHER		1	*			
C20	168526-9	CUP		1	*			
C30	264025-0	HEX. NUT M10-17		1	*			
D10		INC. 40-44,46,49-51			*			
037-2	123833-7	GEAR CASE ASSEMBLY	S	1				
C10	346084-7	CLAMP WASHER		1				
C20	168526-9	CUP		1				
C30	264025-0	HEX. NUT M10-17		1				
D10		INC. 40-42,44,46,49-51						
040	210049-4	BALL BEARING 609ZZ		1	*			
040-1	210157-1	BALL BEARING 609ZZ	O	1				
041	961005-4	RETAINING RING S-9		1	*			
041-1	257986-1	RETAINING RING (EXT) S-9	O	1				
042	962103-7	RETAINING RING R-24		1	*			
042-1	257987-9	RETAINING RING (INT)R-24	O	1				
043	922241-7	HEX. SOCKET HEAD BOLT M5X25		1				

Please order the parts with part number.

Print Date 26/9/2021

Model No.AT-3630 300MM CORDLESS STRING TRIMMER

Item	Parts No.	Description	I/C	Qty	New/Old	Opt. 1	Opt. 2	Note
044	265590-2	+HEX.BOLT M8X10 WITH R		1				
046	188902-1	CUTTER SHAFT SET		1	*			
046-1	183A00-2	CUTTER SHAFT SET	O	1	*			
046-2	183K10-9	CUTTER SHAFT SET	O	1				
049	210115-7	BALL BEARING 6001LLU		1				
050	962106-1	RETAINING RING R-28		1	*			
050-1	257407-3	RETAINING RING (INT)R-28	O	1				
051A	331861-0	RECEIVE WASHER		1	*			
051B	331861-0	RECEIVE WASHER		1	*			
051-1A	331861-0	RECEIVE WASHER	O	1	*			
051-1B	331861-0	RECEIVE WASHER	O	1	*			
051-1I	331861-0	RECEIVE WASHER		1	*			
051-2	326821-5	RECEIVE WASHER	O	1				
055	451566-7	PROTECTOR		1				
056	451565-9	PROTECTOR COVER		1				
057	213105-9	O RING 11		2				
058	346073-2	PROTECTOR CLAMP		1				
059	922353-6	HEX.SOCKET HEAD BOLT M6X30		2				
060	911233-1	PAN HEAD SCREW M5X20		1				
061	451981-5	GEAR BOX COVER		1				
062	424307-4	PIPE RUBBER		1				
063	922231-0	HEX. SOCKET HEAD BOLT M5X20		1				
064	318560-1	PIPE BRACKET		1				
065	911233-1	PAN HEAD SCREW M5X20		4				
066	263002-9	RUBBER PIN 4		1				
067	213045-1	O-RING 6		1				
068	325811-5	SPINDLE HUB		1				
069	211148-5	BALL BEARING 6001ZZ		1				
070	253744-3	FLAT WASHER 12		1				
071	227720-3	HELICAL GEAR 33		1				
072	253744-3	FLAT WASHER 12		1				
073	211150-8	BALL BEARING 6901ZZ		1				
074	318559-6	GEAR BOX		1				
075	265995-6	TAPPING SCREW 4X18		4				
076	266041-8	TAPPING SCREW 5X25		4				
077	451572-2	STAND		1				
078	911233-1	PAN HEAD SCREW M5X20		2				
079	699047-5	POWER SUPPLY CORD UNIT		1				
080	265995-6	TAPPING SCREW 4X18		5				
081	867950-0	AT-3630 NAME PLATE		1				
082	251314-2	+ SCREW M4X12		4				

Model No.AT-3630 300MM CORDLESS STRING TRIMMER

Item	Parts No.	Description	I/C	Qty	New/Old	Opt. 1	Opt. 2	Note
083	346194-0	BATTERY GUARD		1				
084	188837-6	HOUSING SET		1	*			
D10		INC. 94			*			
084-1	183B12-1	HOUSING SET	<	1	*			
D10		INC. 94			*			
084-2	183C18-5	HOUSING SET	S	1				
D10		INC. 94						
085	265995-6	TAPPING SCREW 4X18		3				
086	188838-4	MOTOR HOUSING SET		1				
D10		INC. 90						
087	213961-7	O RING 22		1				
088	619254-4	ROTOR		1				
089	629880-1	STATOR		1				
090	188838-4	MOTOR HOUSING SET		1				
D10		INC. 86						
091	265995-6	TAPPING SCREW 4X18		1				
092	687261-5	STRAIN RELIEF		1				
093	346039-2	SUPPORT PLATE		1				
094	188837-6	HOUSING SET		1	*			
D10		INC. 84			*			
094-1	183B12-1	HOUSING SET	<	1	*			
D10		INC. 84			*			
094-2	183C18-5	HOUSING SET	S	1				
D10		INC. 84						
095	643849-1	TERMINAL		1				
096	631942-3	CONTROLLER		1	*			
096-1	620496-5	CONTROLLER	S	1				
097	631941-5	CONTROLLER COMPLETE		1	*			
D10		INC. 95,96			*			
097-1	620497-3	CONTROLLER COMPLETE	S	1				
D10		INC. 95,96						
098	140285-7	INDICATION PLATE COMPLETE		1				
100	265995-6	TAPPING SCREW 4X18		1				
101	346280-7	CUTTER		1				
102	140583-9	PROTECTOR EXTENSION COMPLETE		1				
C10	891041-5	INDICATION LABEL		1				
103A	451601-1	SPACER 24		1				
103B	451601-1	SPACER 24		1				
103I	451601-1	SPACER 24		1				
A01	195152-1	TRIMMER HEAD 94-M10L SET D		1				
C10	141181-2	HOUSING COMPLETE		1				

Model No.AT-3630 300MM CORDLESS STRING TRIMMER

Item	Parts No.	Description	I/C	Qty	New/Old	Opt. 1	Opt. 2	Note
C20	318815-4	NUT M10		1				
C30	453227-5	COVER		1				
C40	234229-8	COMPRESSION SPRING 13		1				
C50	453228-3	BOBBIN		1				
C60	318816-2	EYE LET		2				
C10	141181-2	HOUSING COMPLETE		1				
C20	318815-4	NUT M10		1				
C30	453227-5	COVER		1				
C40	234229-8	COMPRESSION SPRING 13		1				
C50	453228-3	BOBBIN		1				
C60	318816-2	EYE LET		2				
C10	141181-2	HOUSING COMPLETE		1				
C20	318815-4	NUT M10		1				
C30	453227-5	COVER		1				
C40	234229-8	COMPRESSION SPRING 13		1				
C50	453228-3	BOBBIN		1				
C60	318816-2	EYE LET		2				
A02	125516-5	BAND ASSEMBLY		1				
A03A	168526-9	CUP		1	*			
A03B	168526-9	CUP		1	*			
A04A	264025-0	HEX. NUT M10-17		1	*			
A04B	264025-0	HEX. NUT M10-17		1	*			
A05A	346084-7	CLAMP WASHER		1	*			
A05B	346084-7	CLAMP WASHER		1	*			
A06	782210-8	SOCKET WRENCH 17		1				
A07	783202-0	HEX. WRENCH 4		1				
A08	783217-7	HEX. WRENCH 5		1				
A09	831315-2	ACCESSORY BAG		1				
A10A	***LG-363	LG-363 FAST CHARGER		1	*			
A10I	***LG184	LG-184 FAST CHARGER SET		1	*			
A10-1A	***DC36RA	DC36RA FAST CHARGER	O	1				
A10-1I	***DC18RC	DC18RC FAST CHARGER	O	1				
A11A	195126-2	BATTERY AP-363 SET		2	*			
A11I	194490-8	BATTERY AP-183 SET		2	*			
A11-1A	195126-2	BATTERY AP-363 SET	O	2	*			
A11-1I	194490-8	BATTERY AP-183 SET	O	2	*			
A11-2A	194873-2	BATTERY BL3626 SET	<	2	*			
A11-2I	196015-4	BATTERY BL1830 SET	O	2	*			
A11-3A	194873-2	BATTERY BL3626 SET	O	2				
A11-3I	197600-6	BATTERY BL1830B SET	<	2	*			
A11-4I	197600-6	BATTERY BL1830B SET	O	2				
A12A	451153-2	BATTERY COVER		1				

Model No.AT-3630 300MM CORDLESS STRING TRIMMER

Item	Parts No.	Description	I/C	Qty	New/Old	Opt. 1	Opt. 2	Note
A12I	195852-3	BATTERY CONVERTER SET		1	*			
A12-1I	196812-8	BATTERY CONVERTER SET	<	1	*			
A12-2I	197215-9	BATTERY CONVERTER SET	<	1				
A13I	196007-3	BATTERY GUARD SET		1				

Please order the parts with part number.

Print Date 26/9/2021

NHP Motoculture
Cultivez votre univers