Retrouvez cette piece sur nhp-motoculture.fr en cliquant sur la reference

Model No.EP40 String Trimmer

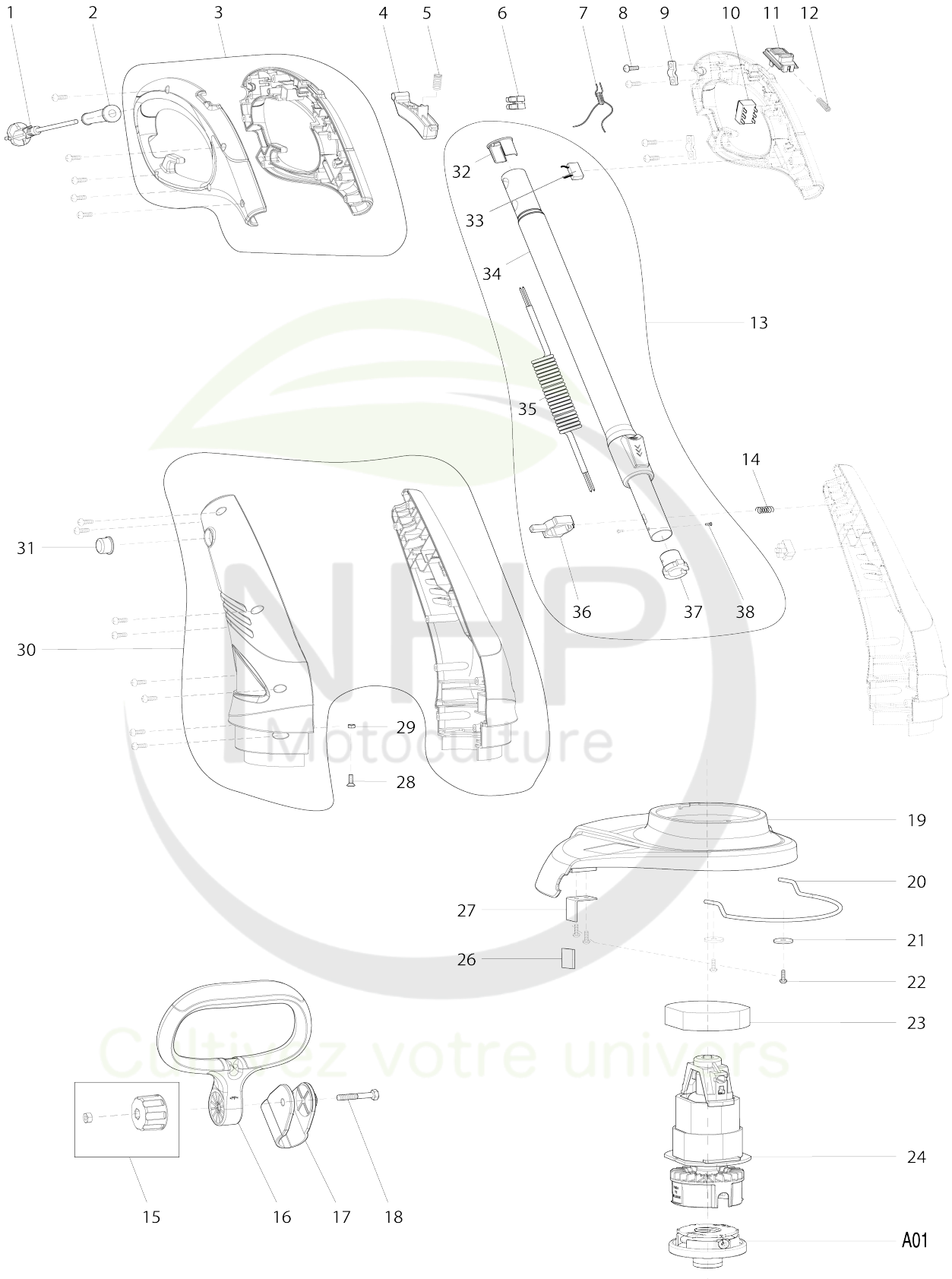

Model No.ET40 String Trimmer

Numéro d'article	N ° de pièces	Description	Interchangeabilité	Q'ty	Nouvelle / ancienne	Note 1	Note 2
001	DA00000040	POWER SUPPLY CORD		1			
002	DA00000041	CORD GUARD		1			
003	DA00000051	HANDLE SET		1			
004	DA00000008	SWITCH TRIGGER		1			
005	DA00000009	SPRING		1			
006	DA00000010	TERMINAL BLOCK		2			
007	DA00000043	INTERNAL WIRE		1			
008	DA00000012	SCREW ST4X16		18			
009	DA00000013	CORD CLAMP		2			
010	DA00000044	SWITCH		1			
011	DA00000015	LOCK OFF LEVER		1			
012	DA00000016	SPRING		1			
013	DA00000017	PIPE SHAFT ASS'Y		1	*		
013		INC. 32-38			*		
013-1	DA00001307	PIPE SHAFT ASS'Y	O	1			
013-1		INC. 32, 34-38					
014	DA00000018	SPRING		1			
015	DA00000019	KNOB ASS'Y		1			
016	DA00000045	LOOP HANDLE		1			
017	DA00000046	LOOP HANDLE BASE		1			
018	DA00000022	HEX BOLT M6X45		1			
019	DA00000047	SAFETY COVER		1	*		
019-1	DA00000782	SAFETY COVER 300	S	1			
020	DA00000024	GUARD		1	*		
020-1	DA00000783	GUARD	S	1			
021	DA00000025	WASHER 5		2	*		
021-1	DA00000784	WASHER	S	2			
022	DA00000026	SCREW ST4X12		4	*		
022-1	DA00000026	SCREW ST4X12	O	6			
023	DA00000027	MOTOR FORM RING		1	*		
023-1	DA00001328	MOTOR FORM RING	O	1			
024	DA00000048	MOTOR		1			
026	DA00000030	BLADE COVER		1			
027	DA00000031	BLADE		1			
028	DA00000032	SCREW M4X12		1			
029	DA00000033	HEX NUT M4		1			
030	DA00000052	MOTOR HOUSING SET		1			
031	DA00000035	LOCK BUTTON		1			
032	DA00000053	PIPE END		1			
033	DA00000054	CAPACITANCE		1	*		
034	DA00000055	TELESCOPIC TUBE		1			
035	DA00000056	SPRING CABLE		1	*		
035-1	DA00001308	SPRING CABLE-CAPACITOR ASS'Y	<	1			
036	DA00000057	ROTATING BRACKET		1			
037	DA00000058	PIPE END		1			
038	DA00000059	SCREW ST3X6		2			
A01	DA00000002	SPOOL ASS'Y		1			

NHP Motoculture
Cultivez votre univers

A02	DA00000036	SAFETY GOGGLE		1			
A03	DA00000037	SHOULDER BELT		1			
A05	DA00000004	NYLON CORD		1			

Veuillez indiquer les pièces n ° lorsque votre commande. Date d'impression 04/14/2026

NHP Motoculture
Cultivez votre univers