Retrouvez cette piece sur nhp-motoculture.fr en cliquant sur la reference

Model No.RBC2110 STRING TRIMMER

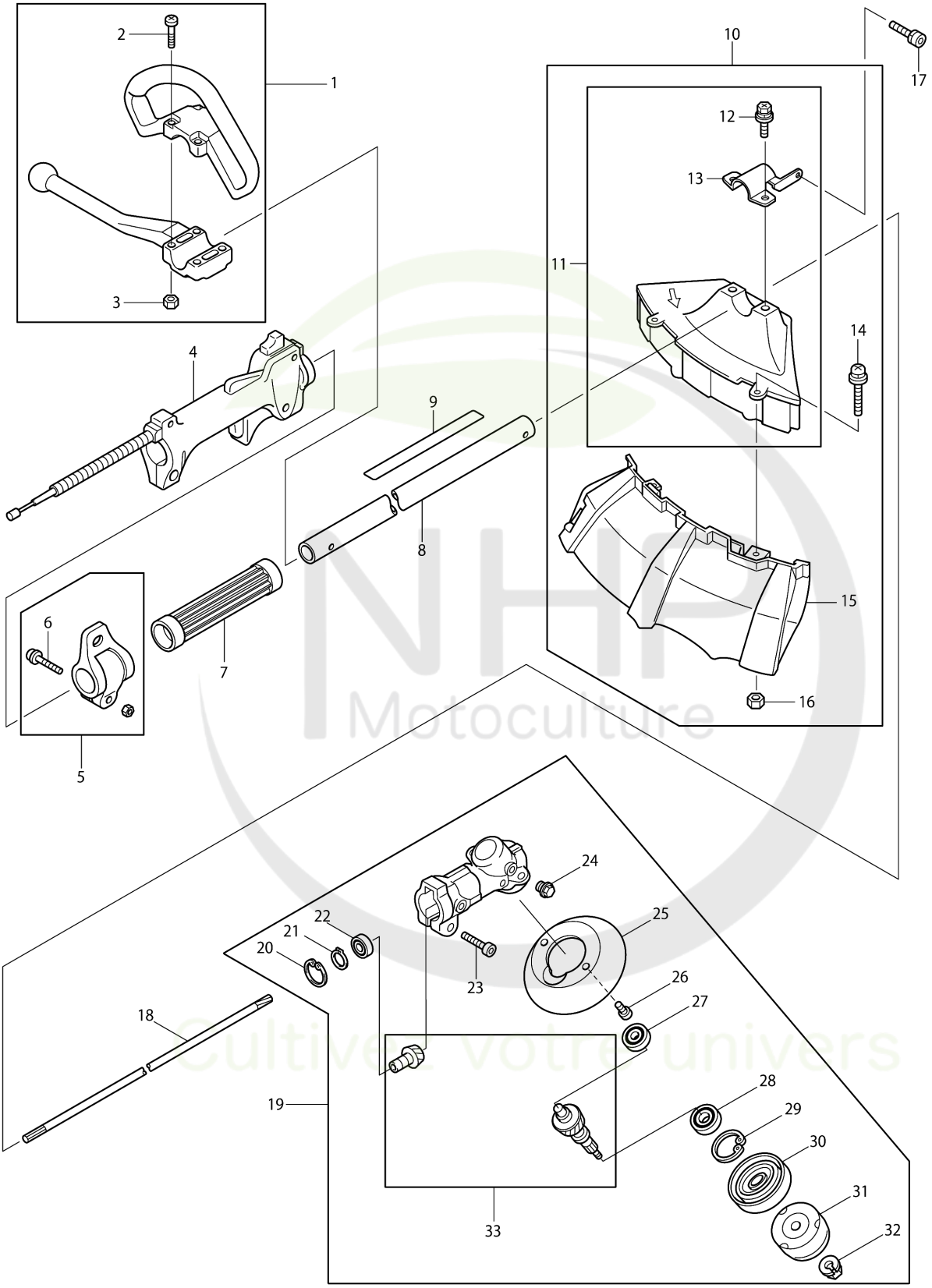

NHP Motoculture
Cultivez votre univers

Model No.RBC2110 STRING TRIMMER

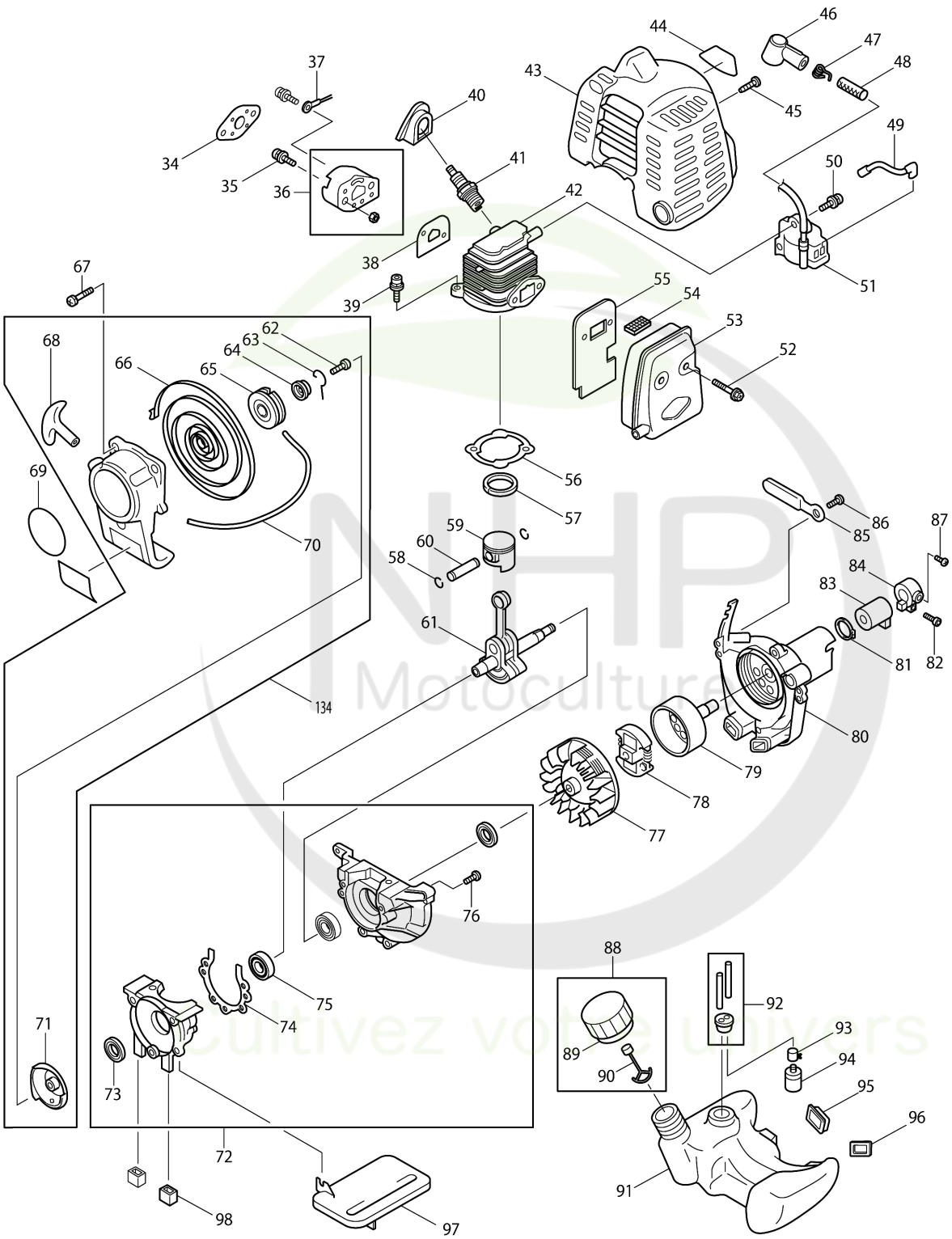

NHP Motoculture
Cultivez votre univers

Model No.RBC2110 STRING TRIMMER

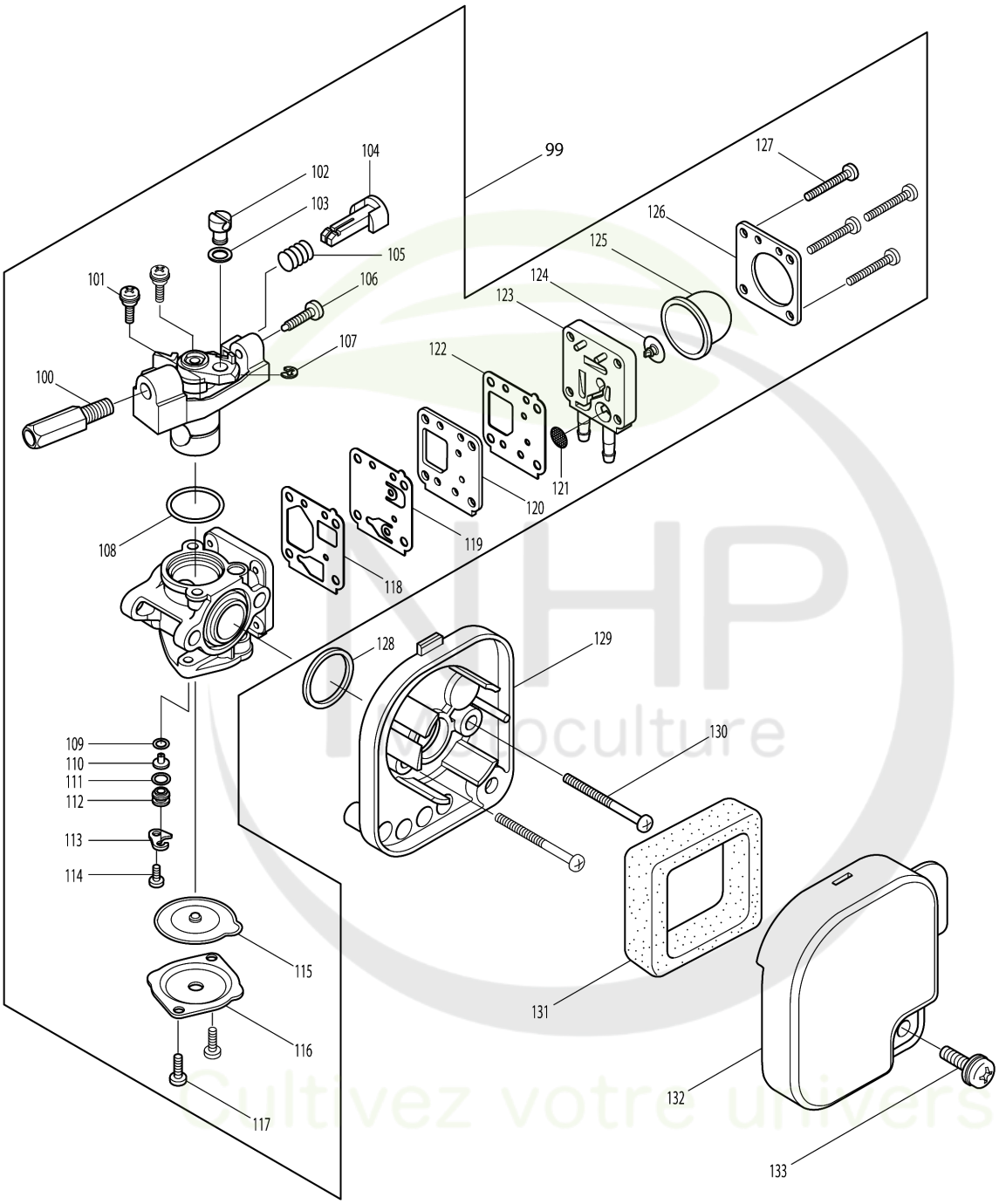

NHP Motoculture
Cultivez votre univers

Model No.RBC2110 STRING TRIMMER

Item	Parts No.	Description	I/C	Qty	New/Old	Opt. 1	Opt. 2	Note
001	6214017000	HANDLE COMPLETE		1	*			
D10		INC. 2,3			*			
001-1	6214016000	HANDLE SET	X	1	*			
D10		INC. 2,3			*			
001-2	125567-8	HANDLE ASSEMBLY	O	1				
D10		INC. 2,3						
002	6214016030	SCREW		4	*			
002-1	266845-8	BINDING HEAD SCREW M5X25	O	4				
003	0022705000	NUT M5		4	*			
003-1	264093-3	HEX. NUT M5	O	4	*			
003-2	931202-6	HEX. NUT M5	O	4				
004	6195021000	CONTROL LEVER ASS'Y		1	*			
004-1	6195026000	CONTROL LEVER ASS'Y	S	1				
005	6197005001	HANGER ASS'Y		1	*			
D10		INC. 6			*			
005-1	126378-4	HANGER ASS'Y	O	1				
D10		INC. 6						
006	0140059360	SCREW & WASHER ASS'Y		1	*			
006-1	266788-4	PAN HEAD SCREW M5X20 WITH WR	O	1				
007	6271501501	SPACER		1	*			
007-1	450659-7	SPACER	O	1				
008	6191001001	SHAFT PIPE COMPLETE		1	*			
008-1	141986-0	SHAFT PIPE COMPLETE	O	1				
009	6199519800	CAUTION LABEL		1	*			
009-1	800N21-4	CAUTION LABEL	<	1				
010	6198014000	PROTECTOR ASS'Y		1	*			
D10		INC. 11,14-16			*			
010-1	6198014001	PROTECTOR ASS'Y	O	1				
D10		INC. 11,14-16						
011	6258061001	PROTECTOR ASS'Y		1	*			
D10		INC. 12,13			*			
011-1	6258061002	PROTECTOR ASSY	O	1				
D10		INC. 12,13,136						
012	0100069790	BOLT M6X30		2	*			
012-1	0100069770	BOLT,CROSSRECESS	O	2	*			
012-2	266617-1	CROSS-RECESSED HEAD BOLT M6X23	O	2				
013	6258508200	PROTECTOR CLAMP		1	*			
013-1	346493-0	PROTECTOR CLAMP	O	1				
014	0140059380	SCREW ASSEMBLY		2				
015	6198008001	PROTECTOR COMPLETE		1				
016	0021805000	NUT M5		2	*			

Please order the parts with part number.

Print Date 4/7/2019

Model No.RBC2110 STRING TRIMMER

Item	Parts No.	Description	I/C	Qty	New/Old	Opt. 1	Opt. 2	Note
016-1	264035-7	HEX. NUT M5	O	2				
017	0119059490	SOCKET HEAD BOLT M5X14 (W,SW)		1				
018	6191500401	SHAFT		1	*			
018-1	324893-4	SHAFT	O	1				
019	6243500600	GEAR CASE		1	*			
D10		INC. 20-33			*			
019-1	6243006002	CASE,GEAR ASSY	X	1	*			
D10		INC. 20-33			*			
019-2	125476-1	GEAR CASE ASSEMBLY	O	1				
D10		INC. 20-33						
020	0031424000	INNER SNAP RING		1	*			
020-1	257987-9	RETAINING RING (INT)R-24	O	1				
021	6193006120	OUTER SNAP RING		1	*			
021-1	257986-1	RETAINING RING (EXT) S-9	O	1				
022	6212500300	BALL BEARING #609ZZ		1	*			
022-1	210049-4	BALL BEARING 609ZZ	O	1				
023	0119059890	SOCKET HEAD BOLT M5X25		1	*			
023-1	266805-0	H.S.H.BOLT M5X25 WITH W	O	1				
024	6253011012	OIL BOLT M6X9		1	*			
024-1	265578-2	+HEX.BOLT M6X8	O	1				
025	6218500200	GUARD		1	*			
025-1	450653-9	GUARD	O	1				
026	0140059390	SCREW ASSEMBLY		2	*			
026-1	265195-8	+PAN HEAD SCREW M5X12	O	2				
027	0600069990	BALL BEARING 626ZZ		1	*			
027-1	210083-4	BALL BEARING 626	O	1				
028	0600109910	BALL BEARING 6000DDU		1	*			
028-1	210082-6	BALL BEARING 6000DDU	O	1				
029	0031426000	INNER SNAP RING		1	*			
029-1	257988-7	RETAINING RING (INT) R-26	O	1				
030	6218501601	RECEIVE WASHER		1	*			
030-1	6218500000	RECEIVE WASHER	O	1	*			
030-2	332042-9	RECEIVE WASHER	O	1				
031	6218003001	CLAMP COMPL. WASHER		1	*			
031-1	168481-5	CLAMP WASHER COMPLETE	O	1	*			
031-2	168797-8	CLAMP WASHER COMPLETE	O	1				
032	6258505001	NUT		1	*			
032-1	264018-7	HEX.NUT M8	O	1				
033	6243008002	CUTTER SHAFT SET		1	*			
033-1	195350-7	CUTTER SHAFT SET	O	1				
034	5103502801	SPACER GASKET		1	*			
034-1	442177-9	GASKET AIR CLEANER	O	1				

Please order the parts with part number.

Print Date 4/7/2019

Model No.RBC2110 STRING TRIMMER

Item	Parts No.	Description	I/C	Qty	New/Old	Opt. 1	Opt. 2	Note
035	0140059500	SCREW M5X25		2	*			
035-1	266700-4	PAN HEAD SCREW M5X25	O	2				
036	5233014000	INSULATOR COMPL.		1	*			
036-1	141056-5	INSULATOR COMPLETE	O	1				
037	6165500201	WIRE		1	*			
037-1	638784-6	WIRE	O	1				
038	5193500500	INSULATOR GASKET		1	*			
038-1	5193500501	INSULATOR GASKET	O	1	*			
038-2	442175-3	INSULATOR GASKET	O	1				
039	0119059730	SOCKET HEAD BOLT M5X20		2	*			
039-1	266814-9	HEX SOCKET HEAD BOLT M5X20	O	2				
040	5197500100	PLUG CAP COVER		1	*			
040-1	424445-2	PLUG CAP COVER	O	1				
041	0650149661	SPARK PLUG		1	*			
041-1	168648-5	SPARK PLUG (BPMR7A)	O	1				
042	5191500901	CYLINDER		1	*			
042-1	318785-7	CYLINDER	O	1				
043	5195503000	COVER,CYLINDER HD		1	*			
043-1	452973-7	CYLINDER COVER	O	1	*			
043-2	455795-4	CYLINDER COVER	S	1				
044	6279505700	TRADE MARK LABEL "MAKITA"		1	*			
045	0150059790	TAPPING SCREW 5X14		1	*			
045-1	266702-0	TAPPING SCREW 5X14	O	1				
046	0655009870	PLUG CAP		1	*			
046-1	424337-5	PLUG CAP	O	1				
047	0654009931	PLUG CAP SPRING		1	*			
047-1	324891-8	PLUG CAP SPRING	O	1				
048	0851089950	TUBE		1	*			
048-1	444021-6	TUBE	O	1				
049	5197018000	WIRE COMPL		1	*			
049-1	141049-2	WIRE COMPLETE	O	1				
050	0140049770	SCREW ASSY M4X16(W,SW)		2				
051	5197011010	IGNITION COIL		1	*			
051-1	168683-3	IGNITION COIL	O	1				
052	0119059520	SOCKET HEAD BOLT M5X40		2	*			
052-1	266440-4	HEX SOCKET HEAD BOLT M5X40	O	2				
053	5193001002	EXHAUST MUFFLER		1	*			
053-1	168679-4	EXHAUST MUFFLER	O	1				
054	5193001050	SPARK ARRESTER		1				
055	5193500002	INSULATOR,MUFFLER		1	*			
055-1	168680-9	MUFFLER GASKET	O	1				

Please order the parts with part number.

Print Date 4/7/2019

Model No.RBC2110 STRING TRIMMER

Item	Parts No.	Description	I/C	Qty	New/Old	Opt. 1	Opt. 2	Note
056	5191500301	CYLINDER GASKET		1	*			
056-1	442173-7	CYLINDER GASKET	O	1				
057	5212500500	PISTON RING		1	*			
057-1	257320-5	PISTON RING	O	1				
058	0565089970	CLIP		2	*			
058-1	233976-8	CLIP	O	2				
059	5192501701	PISTON		1	*			
059-1	318831-6	PISTON	O	1				
060	5192500500	PISTON PIN		1	*			
060-1	268277-5	PISTON PIN	O	1				
061	5192001002	CRANKSHAFT COMPL		1	*			
061-1	5192001003	CRANKSHAFT COMPLETE	O	1	*			
061-2	141047-6	CRANK SHFT COMPLETE	O	1				
062	5195002060	SET SCREW		1	*			
062-1	266585-8	TAPPING SCREW 5X12	O	1				
063	5195002100	SWING ARM		1	*			
063-1	325923-4	SWING ARM	O	1				
064	5195002110	COLLAR		1	*			
064-1	451938-6	COLLAR	O	1				
065	5195002030	REEL		1	*			
065-1	452972-9	REEL	O	1				
066	5195002050	SPIRAL SPRING		1	*			
066-1	234220-6	SPIRAL SPRING	O	1				
067	0140049770	SCREW ASSY M4X16(W,SW)		3				
068	5225004020	HANDLE		1	*			
068-1	424319-7	STARTER KNOB	O	1				
069	6199520100	MODEL LABEL		1				
070	5255016020	STARTER ROPE		1	*			
070-1	444024-0	STARTER ROPE	O	1				
071	5195500000	PULLEY		1	*			
071-1	168483-1	PULLEY	O	1				
072	5191004001	CRANK CASE ASS'Y		1	*			
D10		INC. 73-76			*			
072-1	123988-8	CRANK CASE ASSEMBLY	S	1				
D10		INC. 73-76						
073	0440109980	OIL SEAL		2	*			
073-1	213638-4	OIL SEAL	O	2				
074	5191500400	CRANKCASE GASKET		1	*			
074-1	442174-5	CRANK CASE GASKET	O	1				
075	0600109980	BALL BEARING 6000		2	*			
075-1	210086-8	BALL BEARING 6000	O	2	*			
075-2	211064-1	BALL BEARING 6000	O	2				

Please order the parts with part number.

Print Date 4/7/2019

Model No.RBC2110 STRING TRIMMER

Item	Parts No.	Description	I/C	Qty	New/Old	Opt. 1	Opt. 2	Note
076	0140059520	SCREW M5X25		3	*			
076-1	266701-2	PAN HEAD SCREW M5X25	O	3	*			
076-2	922241-7	HEX. SOCKET HEAD BOLT M5X25	O	3				
077	5197017010	FLYWHEEL		1	*			
077-1	318791-2	FLY WHEEL	O	1				
078	6192002003	CLUTCH		1	*			
078-1	168818-6	CLUTCH	O	1				
079	6192001001	CLUTCH DRUM COMPLETE		1	*			
079-1	161477-5	CLUTCH DRUM COMPLETE	O	1				
080	6195004002	CLUTCH CASE COMPLETE		1				
081	0031510000	OUTER SNAP RING 10		1	*			
081-1	961006-2	RETAINING RING S-10	O	1				
082	0119059880	SOCKET HEAD BOLT M5X25		1	*			
082-1	266712-7	HEX SOCKET HEAD BOLT M5X25	O	1				
083	6191500203	PIPE DAMPER		1	*			
083-1	424461-4	PIPE DAMPER	O	1				
084	6191501300	PIPE BRACKET		1	*			
084-1	318792-0	PIPE BRACKET	O	1				
085	0566059980	CLAMP		1	*			
085-1	345963-6	CLAMP	O	1				
086	0150059780	TAPPING SCREW M5X20		3	*			
086-1	266713-5	TAPPING SCREW 5X20	O	3	*			
086-2	911233-1	PAN HEAD SCREW M5X20	S	3				
087	0119059850	SOCKET HEAD BOLT M5X14		1	*			
087-1	266711-9	HEX SOCKET HEAD BOLT M5X14	O	1				
088	5256059000	FUEL TANK CAP COMPLETE		1	*			
D10		INC. 89,90			*			
088-1	168668-9	FUEL TANK CAP COMPLETE	O	1				
D10		INC. 89,90						
089	5256058000	FUEL TANK CAP		1	*			
089-1	452920-8	FUEL TANK CAP	O	1				
090	5256067000	STRAP		1	*			
090-1	140436-2	STRAP COMPLETE	O	1				
091	5196500003	FUEL TANK		1	*			
091-1	452989-2	FUEL TANK	O	1				
092	0851159920	TUBE		1	*			
092-1	0851159850	TUBE	O	1	*			
092-2	162329-3	TUBE	O	1				
093	0561059990	HOSE CLAMP		1	*			
093-1	345920-4	HOSE CLAMP	O	1				
094	5236503900	FILTER		1	*			

Please order the parts with part number.

Print Date 4/7/2019

Model No.RBC2110 STRING TRIMMER

Item	Parts No.	Description	I/C	Qty	New/Old	Opt. 1	Opt. 2	Note
094-1	163447-0	FUEL FILTER	O	1	*			
094-2	163447-0	FUEL FILTER	O	1				
095	5036500200	PLATE		1	*			
095-1	424102-2	PLATE	O	1				
096	5036500300	PLATE		1	*			
096-1	424103-0	PLATE	O	1				
097	5193500101	PLATE		1	*			
097-1	452988-4	MUFFLER PLATE	O	1				
098	5216500200	DAMPER		2	*			
098-1	424446-0	DAMPER	O	2				
099	5196036000	CARBURETOR		1	*			
D10		INC. 100-133			*			
099-1	5196043000	CARBURETOR	S	1	*			
D10		INC. 100-133			*			
099-2	168682-5	CARBURETOR	O	1				
D10		INC. 100-133						
100	5196019240	ADJUST SCREW		1	*			
100-1	5196043010	STAY	X	1	*			
100-2	346510-6	STAY	O	1				
101	5196019310	SCREW		2	*			
101-1	5196043020	SCREW	X	2	*			
101-2	266720-8	TAPPING SCREW M3X10	O	2				
102	5196019450	LEVER END		1	*			
102-1	326099-0	END LEVER	O	1				
103	5196019460	WASHER		1	*			
103-1	267837-0	WASHER	O	1				
104	5196036010	STARTER LEVER		1	*			
104-1	452976-1	STARTER LEVER	O	1				
105	5196036020	STARTER SPRING		1	*			
105-1	234221-4	STARTER SPRING	O	1				
106	5196019250	SLOW STOP SCREW		1	*			
106-1	266718-5	TAPPING SCREW M3X16	O	1				
107	5196019510	E-RING		1	*			
107-1	259051-2	E-RING 4.5	O	1				
108	5196019220	O-RING		1	*			
108-1	213630-0	O-RING 18	O	1				
109	5196019150	O-RING		1	*			
109-1	213629-5	O-RING 2	O	1				
110	5196032010	MAIN JET		1	*			
110-1	326100-1	MAIN JET	O	1				
111	5196019410	O-RING		1	*			
111-1	213631-8	O-RING 4	O	1				

Please order the parts with part number.

Print Date 4/7/2019

Model No.RBC2110 STRING TRIMMER

Item	Parts No.	Description	I/C	Qty	New/Old	Opt. 1	Opt. 2	Note
112	5196019360	CHECK VALVE ASSY		1	*			
112-1	126052-4	CHECK VALVE ASSEMBLY	O	1				
113	5196019420	GUIDE PLATE		1	*			
113-1	346509-1	GUIDE PLATE	O	1				
114	5196019430	SCREW		1	*			
114-1	266721-6	TAPPING SCREW M2.6X6	O	1				
115	5196019040	DIAPHRAGM ASSY		1	*			
115-1	126038-8	DIAPHRAGM ASSEMBLY	O	1				
116	5196019050	DIAPHRAGM COVER		1	*			
116-1	346513-0	DIAPHRAGM COVER	O	1				
117	5196019060	SCREW		2	*			
117-1	266715-1	TAPPING SCREW M3X8	O	2				
118	5196019110	PUMP PACKING		1	*			
118-1	442176-1	PUMP PACKING	O	1				
119	5196019120	PUMP DIAPHRAGM		1	*			
119-1	424460-6	PUMP DIAPHRAGM	O	1				
120	5196019350	PUMP PLATE		1	*			
120-1	346508-3	PUMP PLATE	O	1				
121	5196019330	FILTER		1	*			
121-1	352018-0	FILTER	O	1				
122	5196019130	PUMP PACKING		1	*			
122-1	442178-7	PUMP PACKING	O	1				
123	5196019340	PUMP COVER		1	*			
123-1	452975-3	PUMP COVER	O	1				
124	5246009030	COMBINATION VALVE		1	*			
124-1	452977-9	COMBINATION VALVE	O	1				
125	5246009040	PRIMING PUMP		1	*			
125-1	424462-2	PRIMING PUMP	O	1	*			
125-2	424462-2	PRIMING PUMP	O	1				
126	5196019320	PRIMING PUMP PLATE		1	*			
126-1	346507-5	PRIMING PUMP PLATE	O	1	*			
126-2	346507-5	PRIMING PUMP PLATE	O	1				
127	5196019140	SCREW		4	*			
127-1	266716-9	TAPPING SCREW M3X18	O	4				
128	5193017040	O-RING		1	*			
128-1	213632-6	O-RING 14.8	O	1				
129	5193018010	PLATE,AIR CLEANER ASSY		1	*			
129-1	126036-2	AIR CLEANER PLATE ASSEMBLY	O	1				
130	0043105600	PAN HEAD SCREW M5X60		2	*			
130-1	266695-1	PAN HEAD SCREW M5X60	O	2				
131	5193017030	ELEMENT,AIR CLEANER		1	*			

Please order the parts with part number.

Print Date 4/7/2019

Model No.RBC2110 STRING TRIMMER

Item	Parts No.	Description	I/C	Qty	New/Old	Opt. 1	Opt. 2	Note
131-1	443168-3	AIR CLEANER PLATE ELEMENT	O	1				
132	5193018020	CASE,AIR CLEANER		1	*			
132-1	452971-1	AIR CLEANER CASE	O	1				
133	0140059480	SCREW ASS'Y M5X14		1	*			
133-1	266809-2	P.H.SCREW M5X14 WITH WR	O	1				
134	5195009000	REWIND STARTER		1	*			
D10		INC. 62-66,68,70,71			*			
134-1	126037-0	RECOIL STARTER ASSEMBLY	O	1				
D10		INC. 62-66,68,70,71						
135	808723-2	CAUTION LABEL		1				
136	413143-3	WASHER		2				

Please order the parts with part number. Print Date 4/7/2019

NHP Motoculture
Cultivez votre univers