Retrouvez cette piece sur nhp-motoculture.fr en cliquant sur la reference

Model No.PC8216 POWER CUTTER

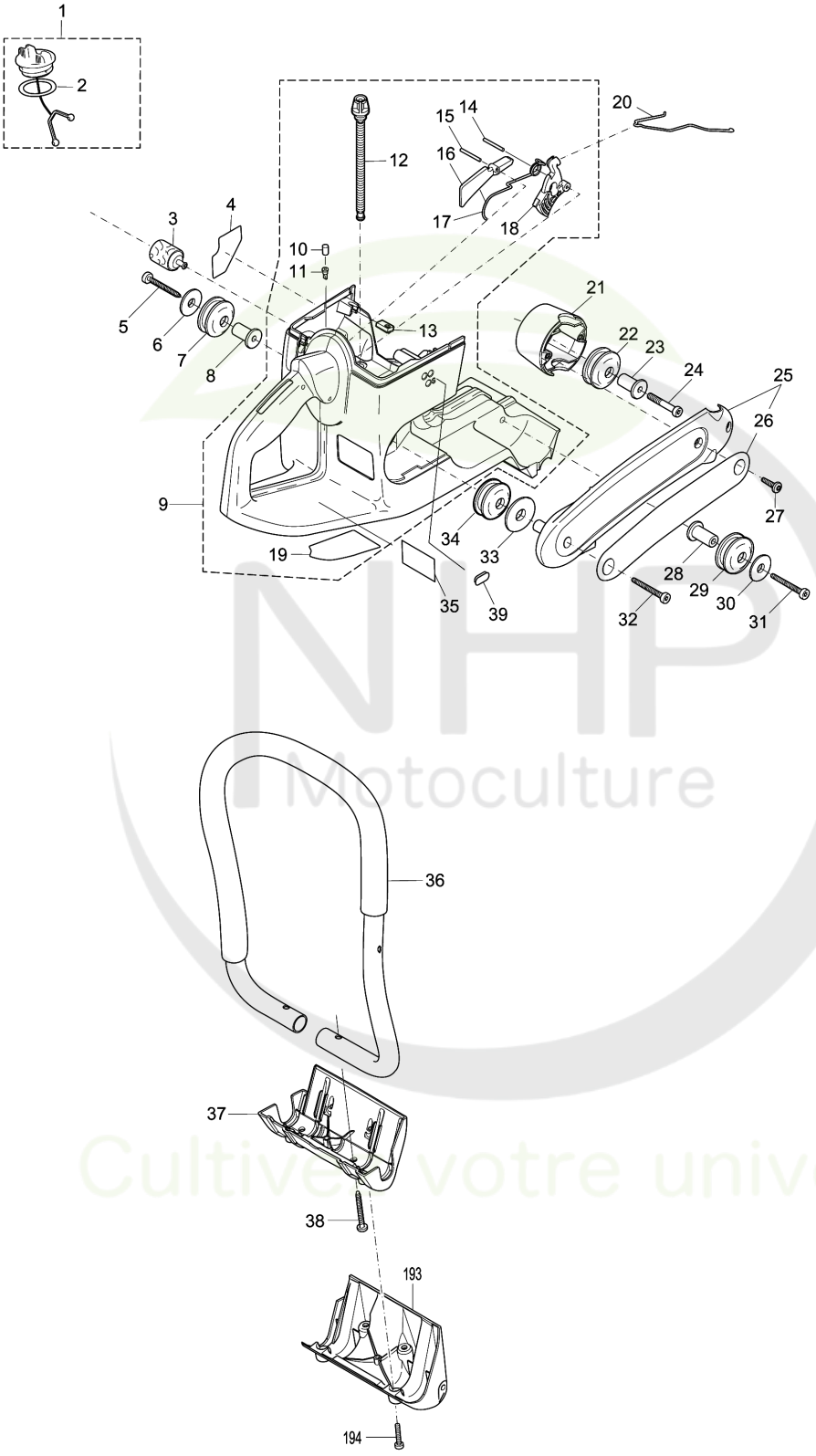

NHP Motoculture
Cultivez votre univers

Model No.PC8216 POWER CUTTER

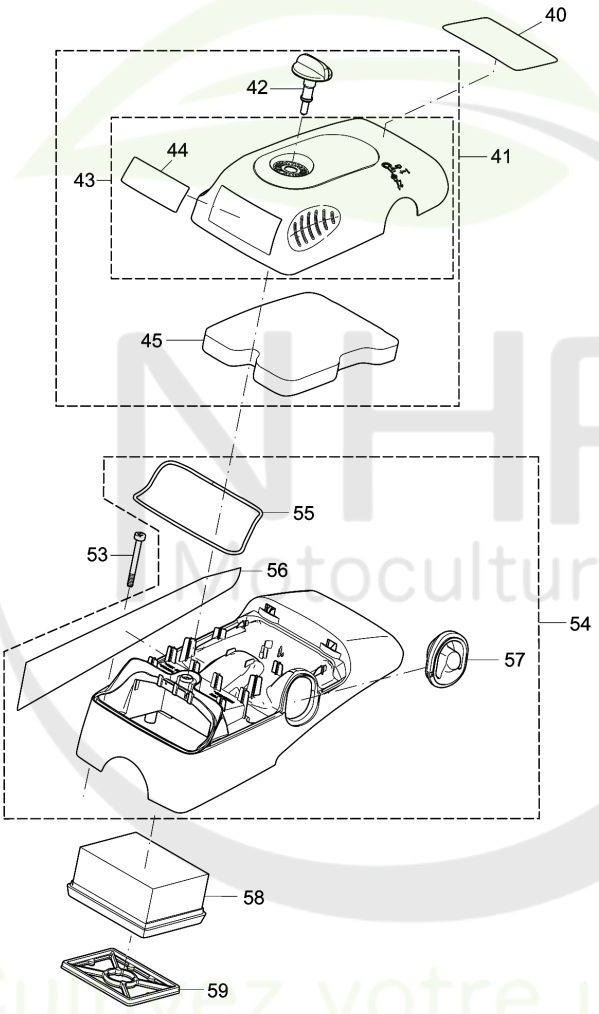

Model No.PC8216 POWER CUTTER

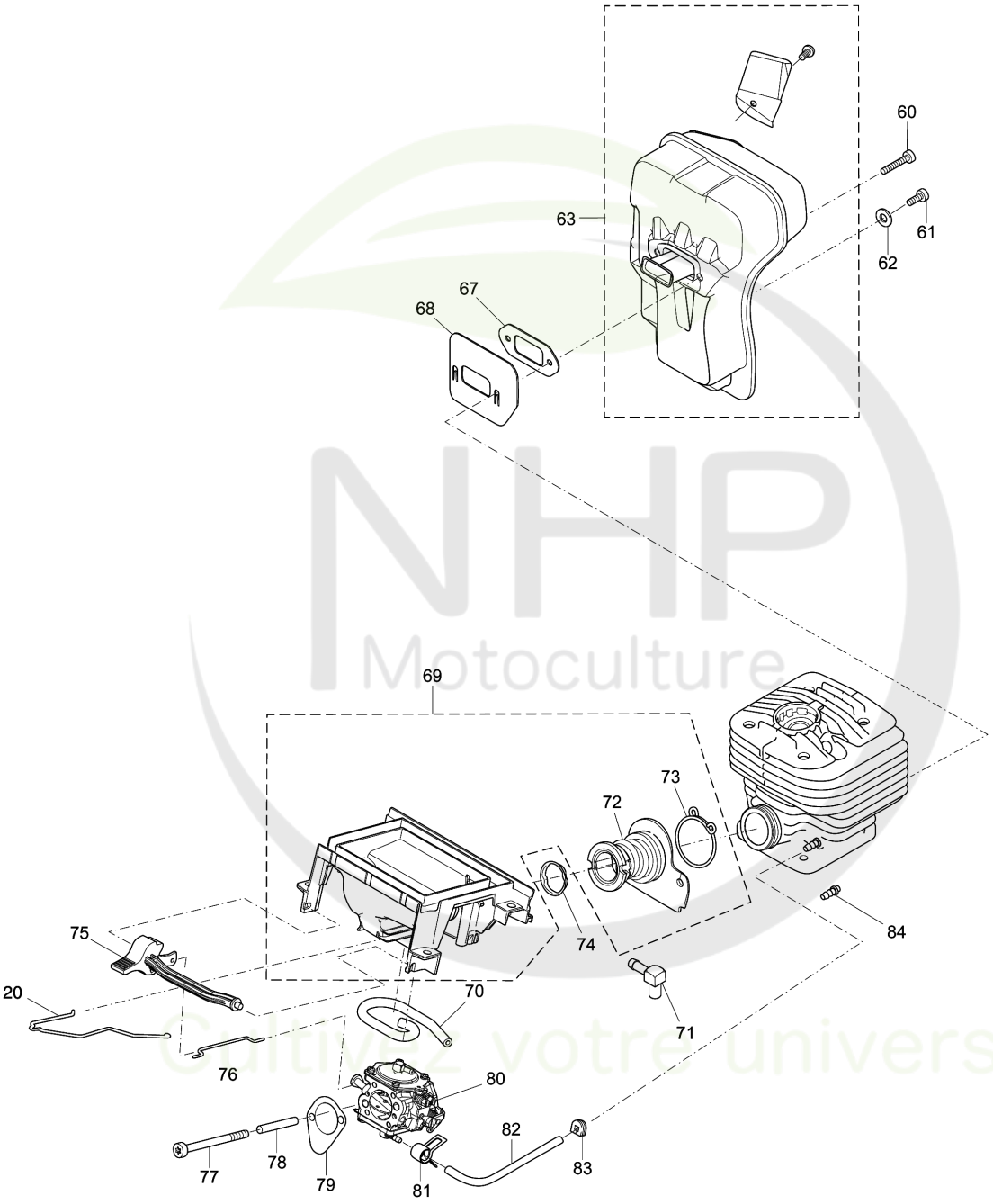

NHP Motoculture
Cultivez votre univers

Model No.PC8216 POWER CUTTER

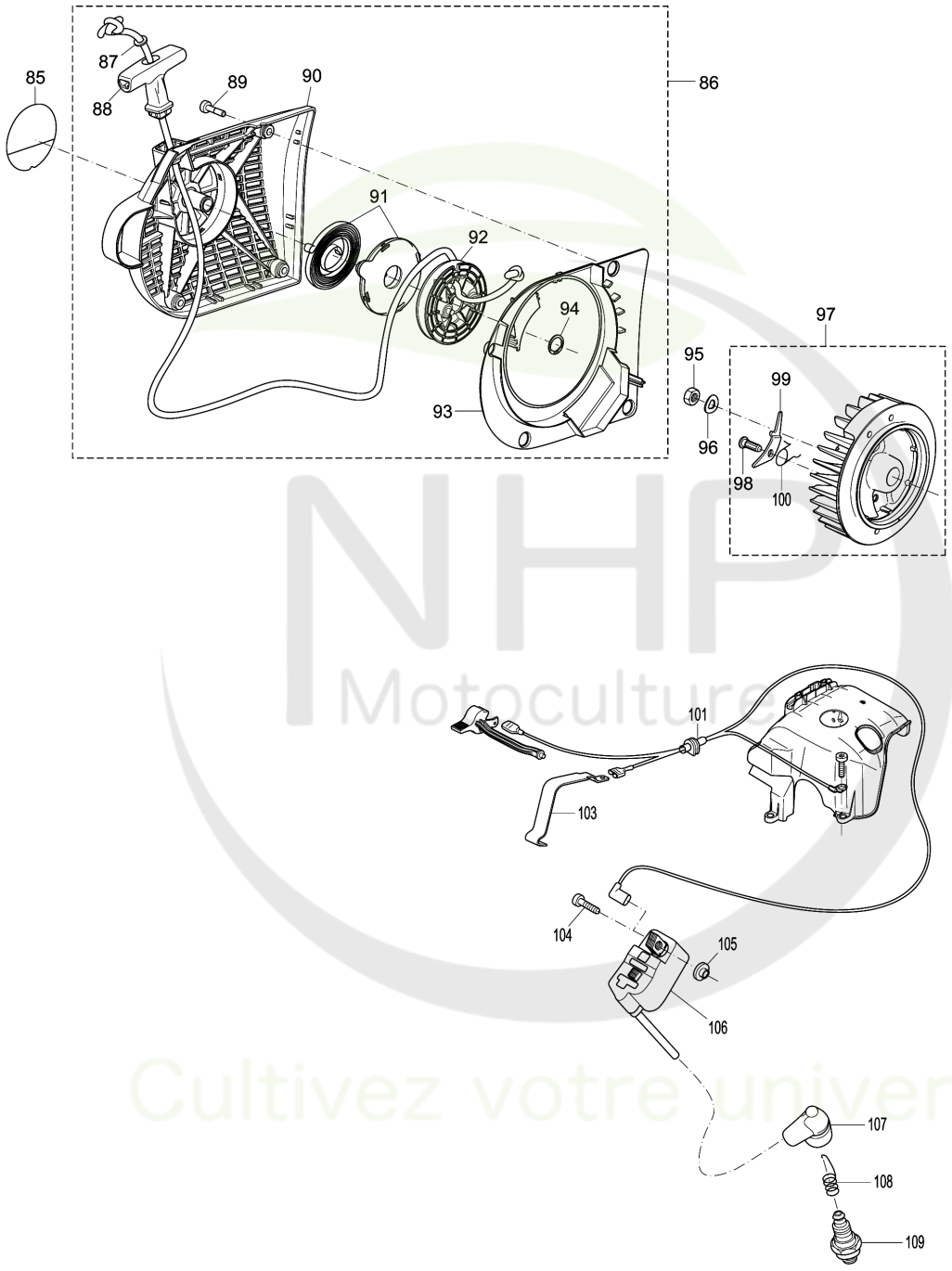

NHP Motocultures
Cultivez votre univers

Model No.PC8216 POWER CUTTER

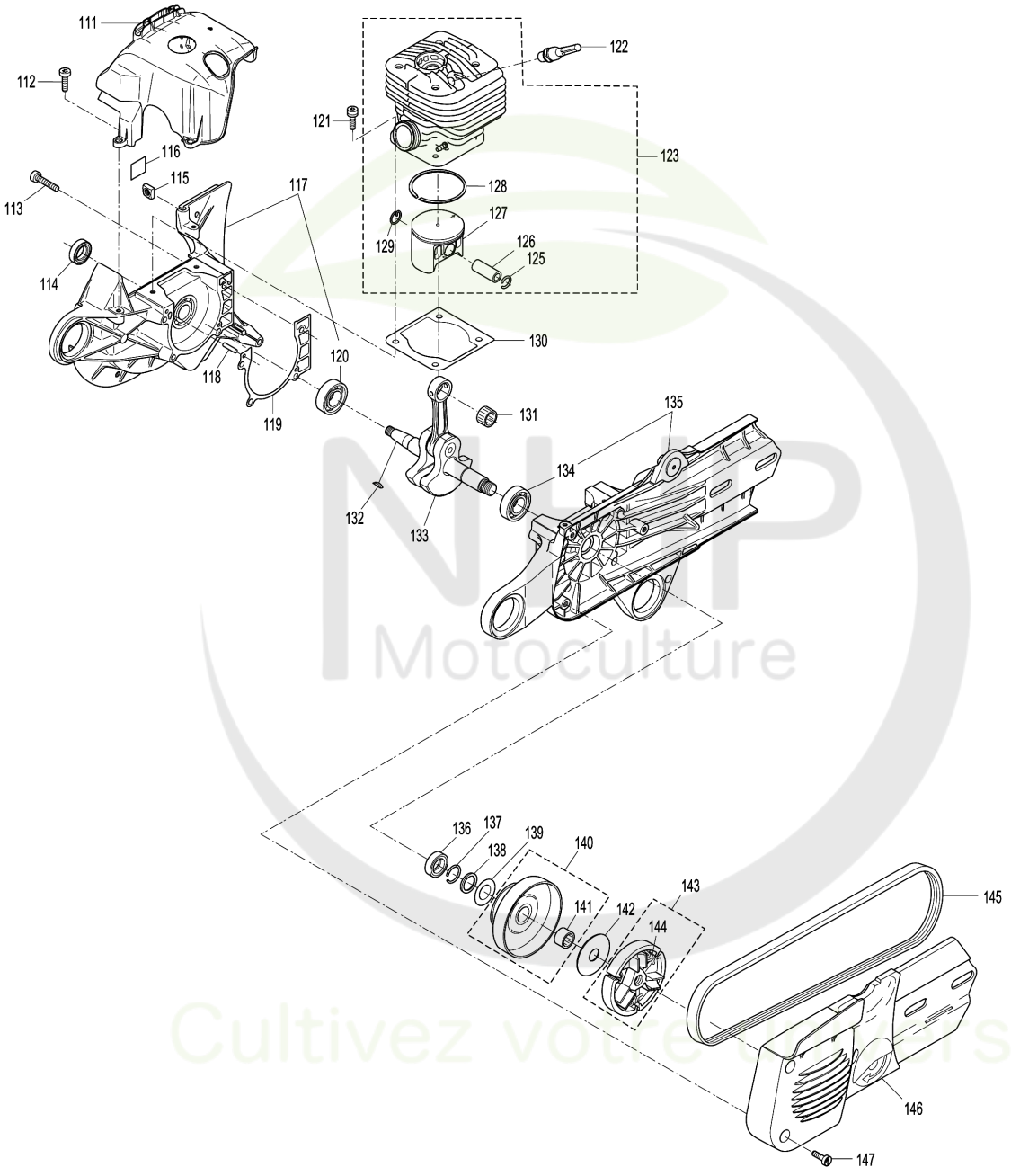

Model No.PC8216 POWER CUTTER

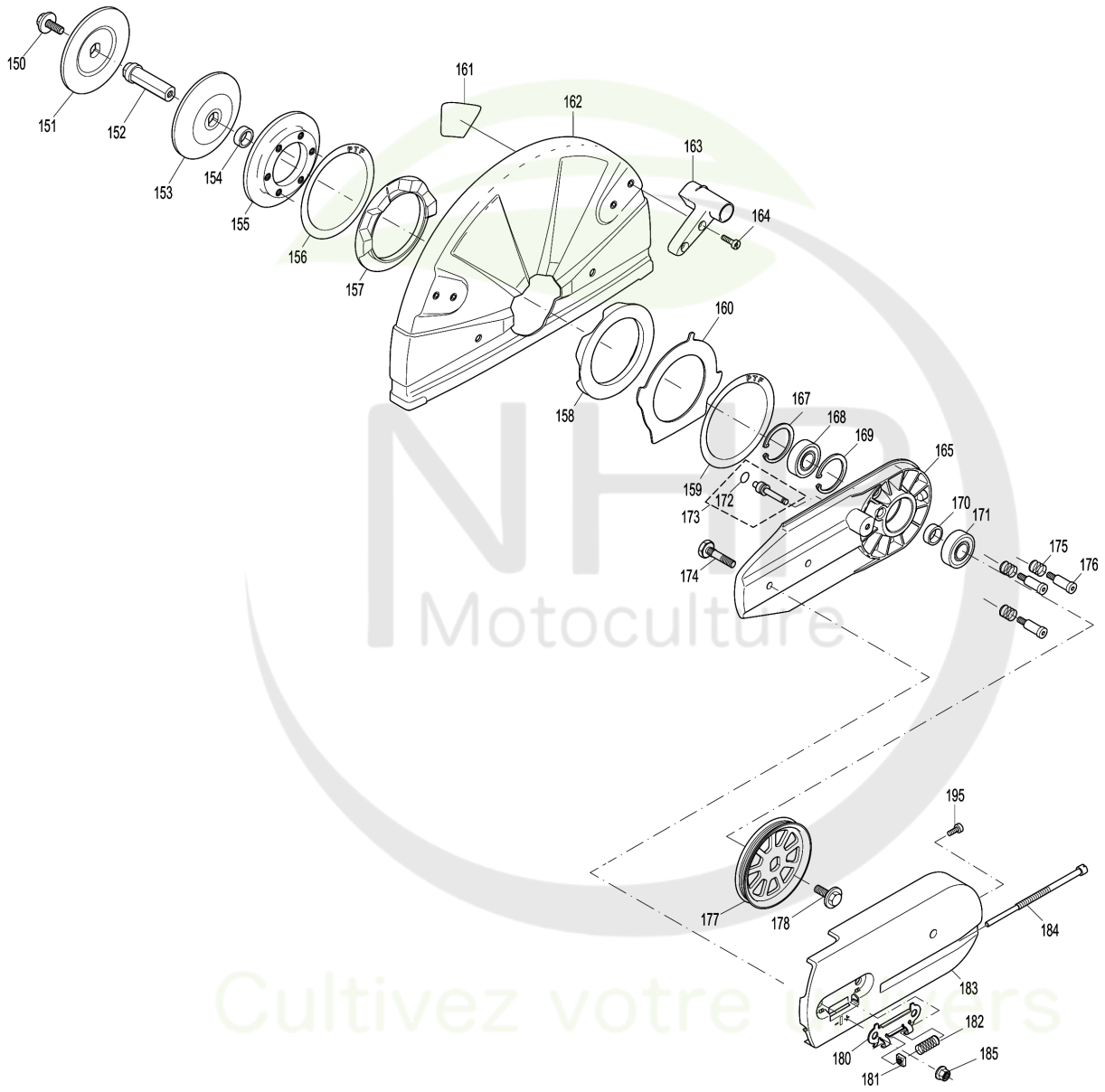

Model No.PC8216 POWER CUTTER

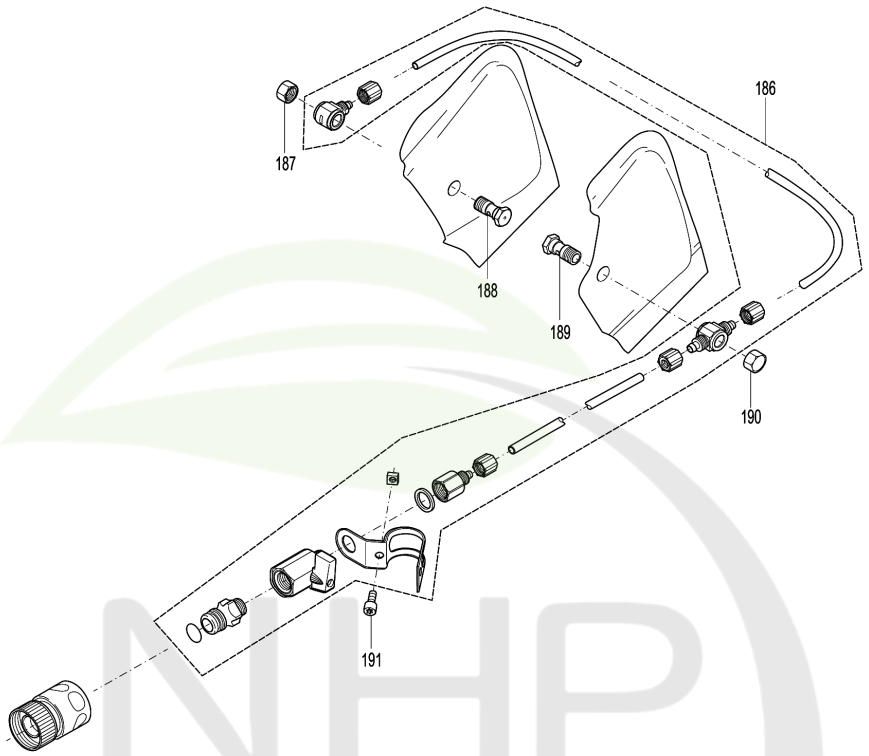

NHP Motoculture
Cultivez votre univers

Model No.PC8216 POWER CUTTER

Item	Parts No.	Description	I/C	Qty	New/Old	Opt. 1	Opt. 2	Note
001	168507-3	TANK CAP COMPLETE		1				
D10		INC. 2						
002	213080-9	O RING 29.5		1				
003	163499-1	SUCTION HEAD		1				
005	266687-0	TAPPING SCREW 5.5X45		1				
006	346870-6	WASHER 5.8X26X2		1				
007	424695-9	VIBRATION DAMPER		1				
008	319268-0	AXLE FOR VIBRATION DAMPER		1				
009	123319-1	FUEL TANK CPL. RED		1				
D10		INC. 10-19						
010	422063-0	SINTER INSERT		1				
011	424170-5	VALVE		1				
012	424723-0	FUEL LINE		1				
013	252897-5	SCREW PLUG		4				
014	268335-7	PIN 3		1				
015	268233-5	PIN 3		1				
016	455821-9	SAFETY LEVER		1				
017	233626-5	SPRING		1				
018	455820-1	THROTTLE LEVER		1				
019	806J47-0	INDICATION LABEL		1				
020	326497-8	THROTTLE LINKAGE		1				
021	455806-5	RETAINER FOR DAMPER BLACK		1				
022	424695-9	VIBRATION DAMPER		1				
023	319268-0	AXLE FOR VIBRATION DAMPER		1				
024	266943-8	H.L. SOCKET HEAD BOLT M5X40		1				
025	123320-6	SIDE SUPPORT DOLMAR		1				
D10		INC. 26						
026	806J45-4	DOLMAR LOGO LABEL		1				
027	266475-5	H.L.TAPPING SCREW 5.5X20		2				
028	319268-0	AXLE FOR VIBRATION DAMPER		1				
029	424695-9	VIBRATION DAMPER		1				
030	346870-6	WASHER 5.8X26X2		1				
031	266687-0	TAPPING SCREW 5.5X45		1				
032	266687-0	TAPPING SCREW 5.5X45		1				
033	346871-4	WASHER		1				
034	424695-9	VIBRATION DAMPER		1				
035	852C53-1	PC-8216 NAME PLATE		1				
036	143097-7	WRAP AROUND HANDLE CPL		1				
037	319270-3	FOOT, MACHINED		1				
038	266687-0	TAPPING SCREW 5.5X45		2				

Model No.PC8216 POWER CUTTER

Item	Parts No.	Description	I/C	Qty	New/Old	Opt. 1	Opt. 2	Note
039	424693-3	PLUG		1				
041	123309-4	COVER CPL. BLACK PRE-FILTER		1	*			
D10		INC. 43,45			*			
041-1	127087-8	FILTER COVER ASSEMBLY	<	1				
D10		INC. 43,45						
042	266692-7	THUMB SCREW M6X15		1				
043	123312-5	FILTER COVER COMPLETE		1				
D10		INC. 42,44						
044	806J48-8	CAUTION LABEL		1	*			
044-1	807L79-2	CAUTION LABEL	O	1				
045	424700-2	PRE-FILTER		1				
053	266941-2	H.L. SOCKET HEAD BOLT M5X50		4				
054	123308-6	HOOD CPL. BLACK		1				
D10		INC. 55-57						
055	424697-5	PACKING RING		1				
056	806J50-1	CAUTION LABEL		1				
057	424703-6	DEKO COVER		1				
058	424701-0	AIR FILTER		1				
059	424705-2	INNER FILTER		1				
060	266960-8	H.L. SOCKET HEAD BOLT M5X20		2				
061	266946-2	H.L. SOCKET HEAD BOLT M5X12		1				
062	267821-5	SPRING WASHER 5		1				
063	161338-9	MUFFLER CPL.		1				
067	346876-4	MUFFLER GASKET		1				
068	346868-3	COOLING PLATE		1				
069	123310-9	INTAKE MANIFOLD CPL.		1				
D10		INC. 70,72,73			*			
D11		INC. 72,73						
070	424699-1	TUBE BLACK RED		1				
071	161311-9	ANGULAR NIPPLE		1				
072	424708-6	INTAKE HOSE		1				
073	233625-7	SPRING CLAMP		1				
074	346867-5	GUIDE RING		1				
075	455808-1	CHOKE SHAFT		1				
076	326496-0	CHOKE LINKAGE		1				
077	266944-6	H.L. SOCKET HEAD BOLT M4X55		2				
078	424710-9	INSULATION TUBE		2				
079	346874-8	GASKET		1				
080	161315-1	CARBURETOR		1				
081	324616-0	HOSE CLAMP		1				

Model No.PC8216 POWER CUTTER

Item	Parts No.	Description	I/C	Qty	New/Old	Opt. 1	Opt. 2	Note
082	424698-3	TUBE 3-120		1				
083	424696-7	RUBBER GROMMET		1				
084	326499-4	NIPPLE		1	*			
085	806P13-3	DOLMAR LOGO LABEL		1				
086	123318-3	STARTING DEVICE CPL. RED		1				
D10		INC. 87-94						
087	267862-1	SPRING WASHER 5		1				
088	452458-3	STARTER GRIP		1				
089	266938-1	H.L. SOCKET HEAD BOLT M5X20		4				
090	123317-5	STARTER HOUSING RED		1				
091	140587-1	REWIND SPRING COMPLETE		1				
092	143098-5	CABLE DRUM COMPLETE		1				
093	455805-7	AIR GUIDE PLATE		1				
094	257997-6	RETAINING RING A14X1V		1				
095	264107-8	HEXAGONAL NUT M8		1				
096	267822-3	SPRING WASHER 8		1				
097	123306-0	FLYWHEEL D=120 CPL		1				
D10		INC. 98-100						
098	326500-5	BEARING BOLT		2				
099	346865-9	STARTER-RATCHET		2				
100	233535-8	TORSION SPRING 13		2				
101	632E41-4	CABLE WITH PLUG		1				
103	346869-1	CONTACT SPRING		1				
104	266942-0	H.L. SOCKET HEAD BOLT M5X20		2				
105	451462-9	ISOLATING WASHER		2				
106	161310-1	IGNITION COIL CDIM 120-15		1				
107	424706-0	PLUG CAP		1				
108	234358-7	TERMINAL SPRING		1				
109	168517-0	SPARK PLUG		1				
111	455819-6	HOOD		1				
112	266940-4	H.L. SOCKET HEAD BOLT M5X15		3				
113	266945-4	H.L. SOCKET HEAD BOLT M5X30		5				
114	213814-0	RADIAL RING		1				
115	264108-6	SQUARE NUT M5		1				
116	424707-8	RUBBER SHEET		1				
117	143226-2	CRANKCASE MS CPL.		1				
D10		INC. 120						
118	258038-1	CLAMPING PIN		2				
119	346877-2	CRANK CASE GASKET		1				
120	211154-0	BALL BEARING 6202		1				

Model No.PC8216 POWER CUTTER

Item	Parts No.	Description	I/C	Qty	New/Old	Opt. 1	Opt. 2	Note
121	266473-9	H.L. SOCKET HEAD BOLT M5X23		4	*			
121-1	266473-9	H.L. SOCKET HEAD BOLT M5X23	O	4				
122	455804-9	DECOMPRESSION VALVE		1				
123	123441-4	CYLINDER PISTON SET		1	*			
D10		INC. 125-129			*			
123-1	135794-9	CYLINDER ASS'Y	S	1				
D10		INC. 125-129						
125	234359-5	CIRCLIP 12		1				
126	257841-7	PISTON PIN		1				
127	319282-6	PISTON 52		1	*			
127-1	198667-7	PISTON SET	X	1				
D10		INC. 125,126,128,129						
128	257381-5	PISTON RING 52		1				
129	234359-5	CIRCLIP 12		1				
130	346873-0	GASKET		1				
131	212133-1	PISTON PIN BEARING 12X16X13		1				
132	254042-8	WOODRUFF-KEY 3X3,7		1				
133	143109-6	CRANKSHAFT CPL.		1				
134	211154-0	BALL BEARING 6202		1				
135	143225-4	CRANKCASE CS CPL		1				
D10		INC. 134						
136	213814-0	RADIAL RING		1				
137	234366-8	SNAP RING A 16		1				
138	346872-2	STOP RING		1				
139	346866-7	GUIDE DISK		1				
140	161318-5	CLUTCH DRUM CPL.		1				
D10		INC. 141						
141	212134-9	NEEDLE ROLLER BEARING 15X21X16		1				
142	267389-1	FLAT WASHER 12		1				
143	123305-2	CLUTCH, CPL		1				
D10		INC. 144						
144	231892-8	TENSION SPRING		3	*			
144-1	231896-0	TENSION SPRING	O	3	*			
144-2	232352-3	TENSION SPRING	O	3				
145	424711-7	V-BELT		1				
146	455834-0	COVER RED WITH SLOTS		1				
147	266947-0	H.L. SOCKET HEAD BOLT M5X14		3				
150	266976-3	HEX. BOLT M8X25		1				
151	224443-4	FLANGE 102		1				
152	326503-9	AXLE		1				

Model No.PC8216 POWER CUTTER

Item	Parts No.	Description	I/C	Qty	New/Old	Opt. 1	Opt. 2	Note
153	224443-4	FLANGE 102		1				
154	257375-0	SPACER, 8MM		1				
155	318746-7	PRESSURE RING		1				
156	442169-8	SLIDING DISC		1				
157	424426-6	RUBBER RING(INNER)		1				
158	424427-4	RUBBER RING(OUTER)		1				
159	442169-8	SLIDING DISC		1				
160	346455-8	IMPACT PLATE		1				
161	807B76-8	CAUTION LABEL		1	*			
161-1	807B76-8	CAUTION LABEL	O	1				
162	347005-2	HOOD		1	*			
162-1	143794-5	HOOD COMPLETE	<	1				
D10		INC. 161						
163	452938-9	GRIP		1				
164	266725-8	H.L.SOCKET HEAD BOLT M5X16		2				
165	319289-2	CUTTING DEVICE		1				
167	257998-4	RETAINING RING 40X1,75		1				
168	211281-3	BALL BEARING 6203LLU		1				
169	257998-4	RETAINING RING 40X1,75		1				
170	257375-0	SPACER, 8MM		1				
171	211281-3	BALL BEARING 6203LLU		1				
172	213625-3	O-RING 9		1				
173	123307-8	STOP BOLT CPL.		1				
D10		INC. 172						
174	266688-8	HEX. BOLT M8		2				
175	234216-7	COMPRESSION SPRING 8		3				
176	266689-6	H.L.COLLAR BOLT M6		3				
177	222185-4	BELT PULLEY		1				
178	266976-3	HEX. BOLT M8X25		1				
180	346457-4	PLATE		1				
181	264112-5	SQUARE NUT M6		1				
182	234215-9	COMPRESSION SPRING 6		1				
183	456066-2	BELT COVER		1				
184	266691-9	TENSIONING SCREW M6		1				
185	252145-2	COLLARED HEX NUT M8		2				
186	123369-6	PARTS FOR WATER ATTCHMENT KIT		1				
187	264109-4	CAPPING NUT		1				
188	266949-6	HOLLOW SCREW, BORED		1				
189	266949-6	HOLLOW SCREW, BORED		1				
190	264109-4	CAPPING NUT		1				
191	266950-1	H.L.SOCKET HEAD BOLT M6X14		1				

Model No.PC8216 POWER CUTTER

Item	Parts No.	Description	I/C	Qty	New/Old	Opt. 1	Opt. 2	Note
193	319294-9	FOOT		1				
194	266605-8	H.L. SOCKET HEAD BOLT M5X16		4				
195	266974-7	H.L. TAPPING SCREW 5 12		1				
A01	197200-2	TOOL KIT		1	*			
C10	782025-3	TORX WRENCH		1	*			
C20	782028-7	UNIVERSAL WRENCH 13-19		1	*			
C30	783012-5	SCREWDRIVER		1	*			
C40	831340-3	TOOL BAG		1	*			
A01-1	197200-2	TOOL KIT	O	1				
C10	782025-3	TORX WRENCH		1				
C20	782028-7	UNIVERSAL WRENCH 13-19		1				
C30	783012-5	SCREWDRIVER		1				
C40	831340-3	TOOL BAG		1				
A02	123121-2	COUPLING SLEEVE		1				
E01	809P12-4	CLEAR LABEL		1				

Please order the parts with part number.

Print Date 31/3/2020

NHP Motoculture
Cultivez votre univers