Retrouvez cette piece sur nhp-motoculture.fr en cliquant sur la reference

Model No.DCV320 320MM CORDLESS SCARIFIER

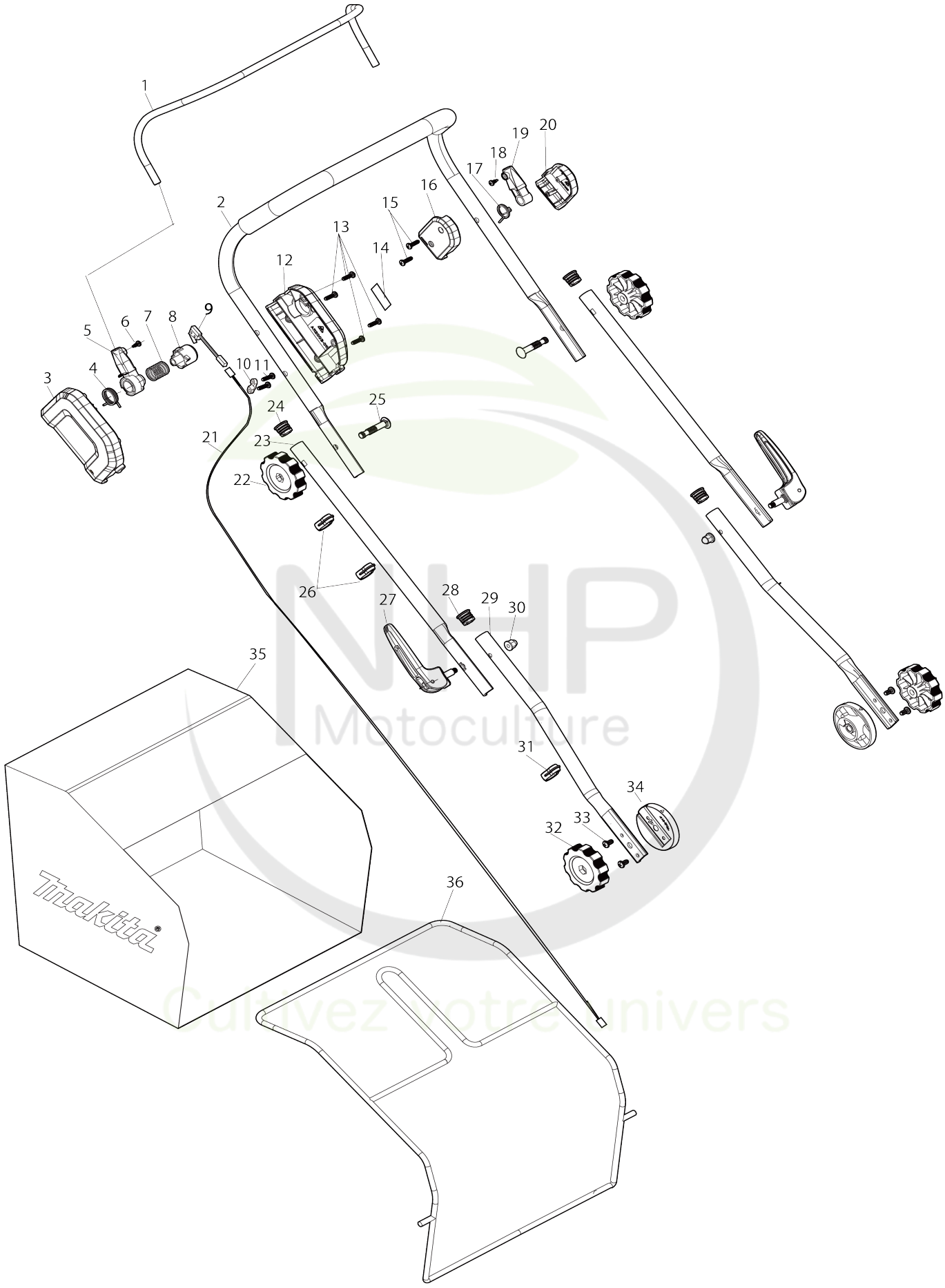

NHP Motoculture
Cultivez votre univers

Model No.DUV320 320MM CORDLESS SCARIFIER

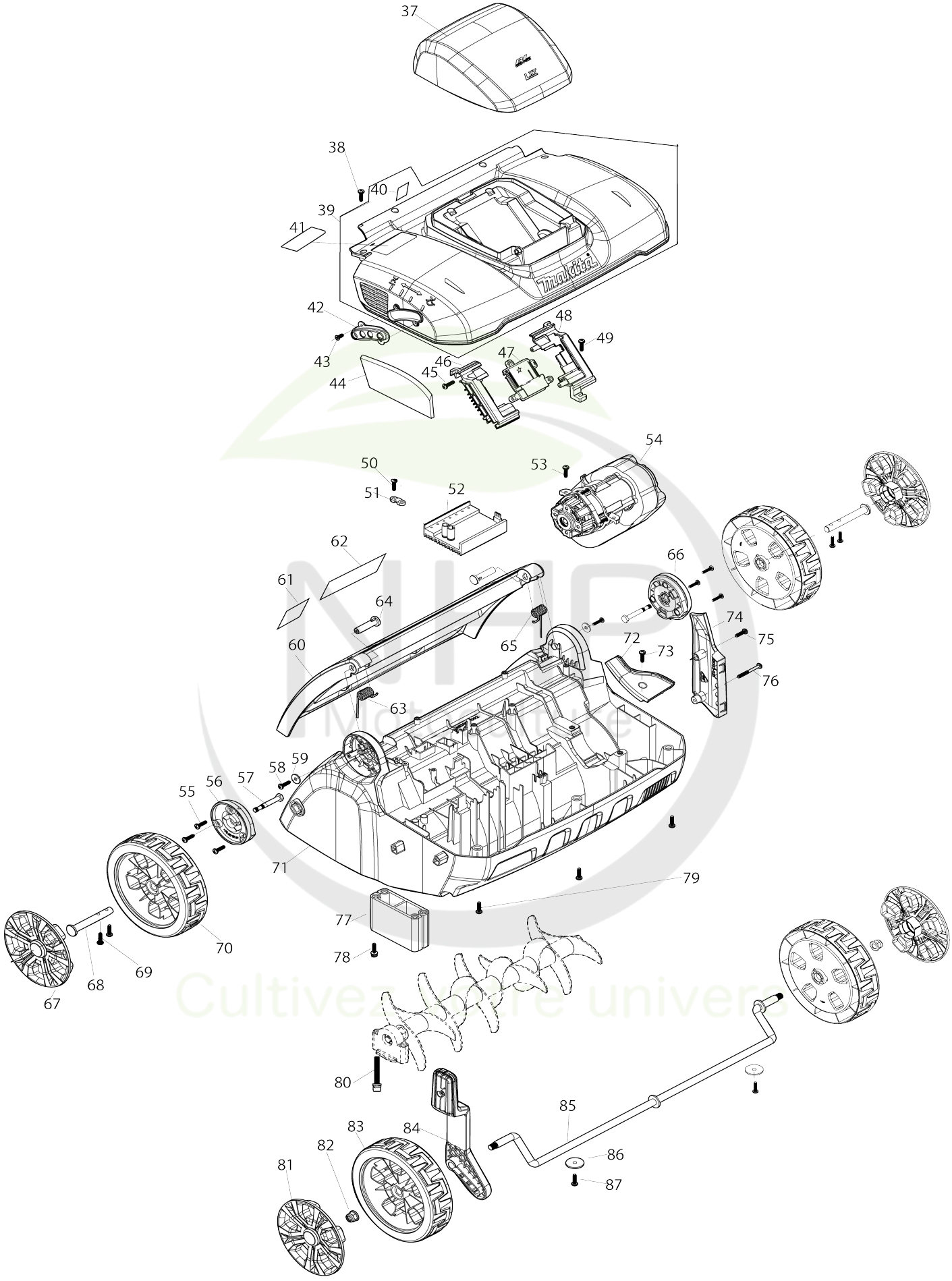

Model No.DUV320 320MM CORDLESS SCARIFIER

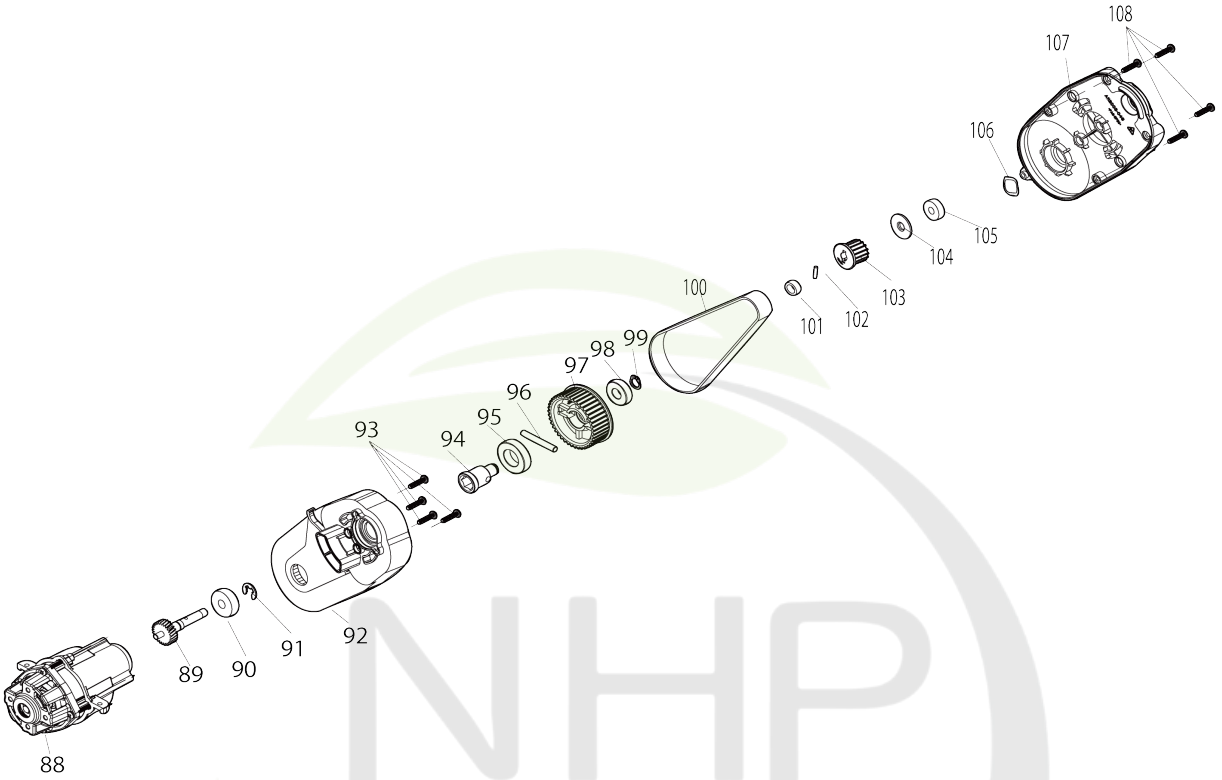

NHP
Motoculture
Cultivez votre univers

Model No.DUV320 320MM CORDLESS SCARIFIER

Numéro d'article	N ° de pièces	Description	Interchangeabilité	Q'ty	Nouvelle / ancienne	Note 1	Note 2
001	YA00001369	SWITCH LEVER		1			
002	YA00001370	UPPER HANDLE		1			
003	YA00001374	SWITCH BOX RIGHT SIDE		1			
004	YA00001364	SWITCH TORSION SPRING		1			
005	YA00001379	SWTICH LEVER END CAP RIGHT		1			
006	YA00001350	TEX SCREW 3.5X10		1			
007	YA00001335	SWITCH SPRING		1			
008	YA00001373	SWITCH BUTTON		1			
009	YA00001391	SWITCH UNIT		1			
010	652023982	CORD CLAMP		1			
011	YA00001354	TAPPING SCREW 4X16		2			
012	YA00001365	SWITCH BOX LEFT SIDE		1			
013	YA00001354	TAPPING SCREW 4X16		4			
014	YA00001321	OPERATIONAL INSTRUCTION LABEL		1			
015	YA00001354	TAPPING SCREW 4X16		2			
016	YA00001368	SPRING BOX RIGHT		1			
017	YA00001336	TORSION SPRING FOR SPRING BOX		1			
018	YA00001350	TEX SCREW 3.5X10		1			
019	YA00001371	SWITCH LEVER END CAP LEFT		1			
020	YA00001380	SPRING BOX LEFT		1			
021	YA00001395	CABTIRE CABLE ASSY AWG26-2-1.0		1			
022	YA00001318	THUMB NUT M8		2			
023	YA00001384	CENTER HANDLE		2			
024	YA00001337	END CAP		2			
025	YA00001386	SADDLE HEAD BOLT M8		2			
026	YA00001320	CORD CLIP		2			
027	YA00001410	FIXING LEVER ASSY		2			
028	YA00001337	END CAP		2			
029	YA00001385	LOWER HANDLE		2			
030	YA00001332	CAP NUT M6		2			
031	YA00001320	CORD CLIP		1			
032	YA00001318	THUMB NUT M8		2			
033	YA00001349	BIND HEAD TAPPING SCREW 5X12		4			
034	YA00001390	HANDLE ANGLE ADJUSTER PLATE		2			
035	YA00001377	GRASS CATCHER BAG		1			
036	YA00001378	GRASS CATCHER BAG FLAME		1			
037	YA00001387	BATTERY COVER		1			
038	YA00001354	TAPPING SCREW 4X16		6			
039	YA00001411	UPPER HOUSING ASSEMBLY		1			
039		INC. 40					
040	YA00001325	BATTERY INDICATOR LABEL		1			
041	YA00001322	NAMEPLATE EU GB HK RU SI		1			
042	YA00001397	HEIGHT ADJUSTER PLATE		1			
043	YA00001348	COUTERSUNK HEAD SCREW M4X10		2			

NHP Motoculture
Cultivez votre univers

044	YA00001357	SPONGE SHEET		1			
045	YA00001353	BIND HEAD TAPPING SCREW 3X14		2			
046	YA00001399	BATTERY HOLDER RIGHT		1			
047	YA00001334	BATTERY TERMINAL		1			
048	YA00001400	BATTERY HOLDER LEFT		1			
049	YA00001354	TAPPING SCREW 4X16		1			
050	YA00001354	TAPPING SCREW 4X16		2			
051	652023982	CORD CLAMP		1			
052	YA00001388	CONTROL UNIT ASSY		1			
053	YA00001354	TAPPING SCREW 4X16		2			
054	YA00001408	MOTOR & BELT DRIVE ASSY		1			
054		INC. 88-108					
055	YA00001354	TAPPING SCREW 4X16		6			
056	YA00001358	ANGLE ADJUSTER PLATE RIGHT		1			
057	YA00001375	SPECIAL HEX BOLT M8X65		2			
058	YA00001354	TAPPING SCREW 4X16		2			
059	YA00001329	FLAT WASHER 5		2			
060	YA00001363	REA FLAP COVER		1			
061	YA00001324	NOISE LABEL AU EU GB HK RU SI		1			
062	YA00001323	WARNING LABEL		1			
063	YA00001403	TORSION SPRING RIGHT		1			
064	YA00001382	REAR FLAP COVER HINGE PIN		2			
065	YA00001404	TORSION SPRING LEFT		1			
066	YA00001359	ANGLE ADJUSTER PLATE LEFT		1			
067	YA00001361	WHEEL COVER		2			
068	YA00001402	REAR AXLE SHAFT		2			
069	YA00001421	BIND HEAD TAPPING SCREW 4X20		4			
070	YA00001360	WHEEL 6'		2			
071	YA00001356	DECK		1			
072	YA00001401	BRACKETS		1			
073	YA00001354	TAPPING SCREW 4X16		1			
074	YA00001372	BELT HOUSING RETAINER COVER		1			
075	YA00001354	TAPPING SCREW 4X16		1			
076	YA00001355	BIND HEAD TAPPING SCREW 4X45		1			
077	652023940	DRUM HOLDER RIGHT SIDE		1			
078	YA00001352	BIND HEAD TAPPING SCREW 4X20		4			
079	YA00001354	TAPPING SCREW 4X16		3			
080	YA00001405	HEX SOCKET HEAD BOLT M6X50 W W		2			
081	YA00001361	WHEEL COVER		2			
082	YA00001345	HEX FLANGE LOCK NUT M8		2			
083	YA00001360	WHEEL 6'		2			
084	YA00001398	HEIGHT ADJUSTER HANDLE		1			
085	YA00001376	FRONT AXLE		1			
086	YA00001328	AXLE FIXING WASHER 4-25		2			
087	YA00001354	TAPPING SCREW 4X16		2			
088	YA00001383	MOTOR ASSY		1			
089	YA00001406	HELICAL GEAR 25		1			
090	YA00001342	BALL BEARING 6200ZZ		1			

091	YA00001344	E-TYPE RETAINING RING 9		1			
092	YA00001392	BEAT HOUSING		1			
093	YA00001412	PAN HEAD SCREW M4X16 WITH WT		4			
094	YA00001366	SHAFT FOR LARGE BELT PULLY		1			
095	YA00001343	BALL BEARING 6904RS		1			
096	YA00001347	PIN 6X45		1			
097	YA00001381	LARGE BELT PULLY		1			
098	YA00001341	BALL BEARING 6001RS		1			
099	YA00001117	RETAINING RING S-12		1			
100	YA00001367	TOOTHED BELT 435-5M		1			
101	YA00001394	RING 10.5X6		1			
102	YA00001346	PIN 3X14		1			
103	YA00001396	SMALL BELT PULLEY		1			
104	YA00001389	BARRING WASHER 8-28		1			
105	YA00001340	BALL BEARING 608RS		1			
106	YA00001330	WAVE WASHER 15.5		1			
107	YA00001393	BELT HOUSING COVER		1			
108	YA00001331	TEX SCREW 4X16		4	*		
108-1	YA00001354	TAPPING SCREW 4X16	X	4			
A01	YA00001316	SCARIFYING BLADE		1			
A02	YA00001333	HEX KEY WRENCH 5		1			
A03B	191A24-4	Jeu rapide chargeur DC18RC		1			
A04B	197280-8	Batterie 1000 BL1850B		1			
A05B	450128-8	Couvercle de batterie		1			

Veuillez indiquer les pièces n ° lorsque votre commande. Date d'impression 06/30/2025

NHP Motoculture
Cultivez votre univers