Retrouvez cette piece sur nhp-motoculture.fr en cliquant sur la reference

Model No.EV3213 ELECTRIC SCARIFIER

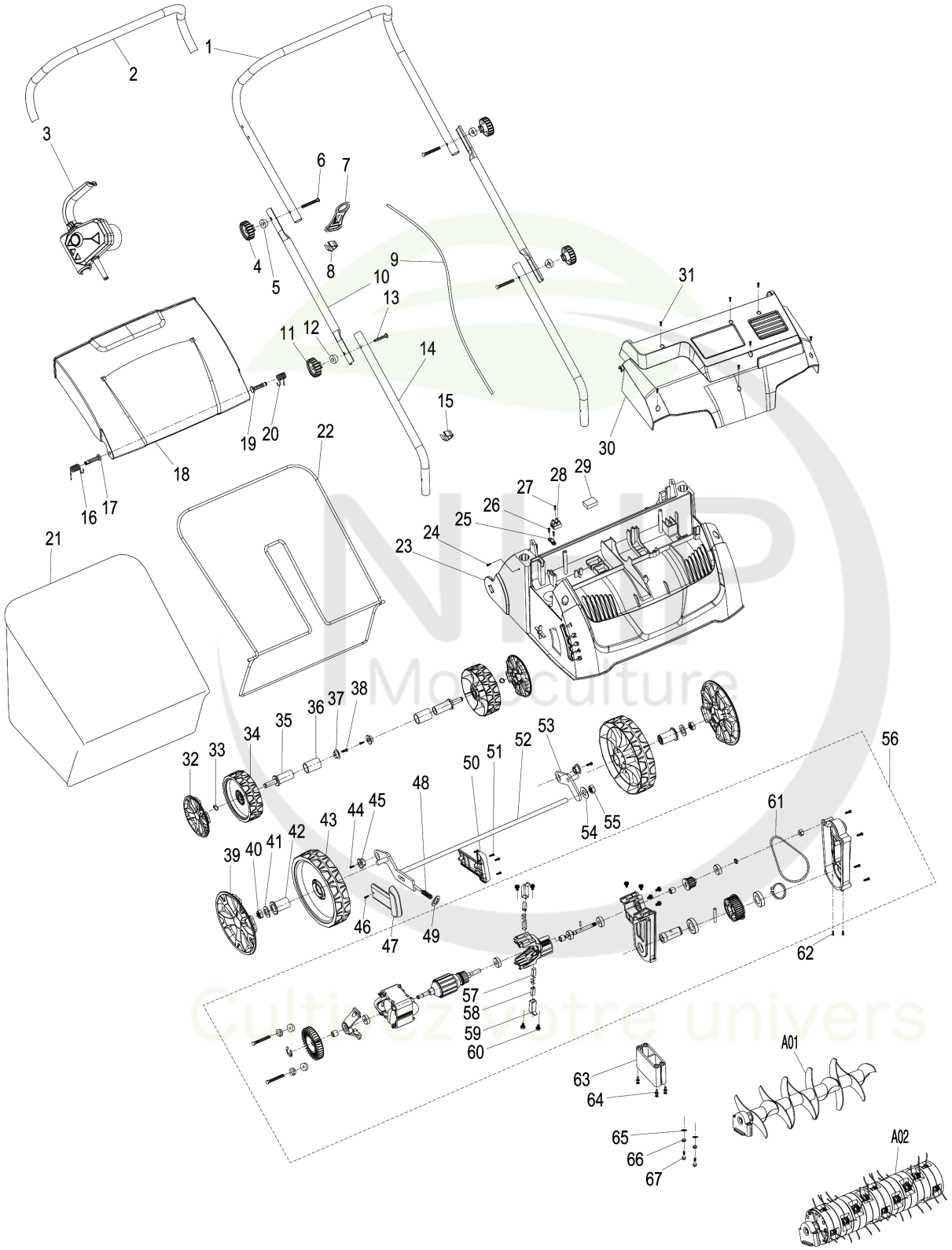

NHP Motoculture
Cultivez votre univers

Model No.EV3213 ELECTRIC SCARIFIER

Item	Parts No.	Description	I/C	Qty	New/Old	Opt. 1	Opt. 2	Note
001	652023913	UPPER HANDLE		1				
002	652024706	HANDLE SHEATH		1				
003	652024703	SWITCH BOX ASSY (EU PLUG)		1				
C10	652023791	TAPPING SCREW 4X18		6				
C20	652023982	CORD CLAMP		1				
C30	652026443	TAPPING SCREW 4X12		2				
004	652024072	KNOB NUT M6		2				
005	652024730	PLASTIC SADDLE WASHER 8		2				
006	652023808	BOLT M6		2				
007	652023811	CABLE HANGER		1				
008	652024705	CABLE CLIP		1				
009	652023787	CONNECTION WIRE		1				
010	652023912	MIDDLE HANDLE		2				
011	652024072	KNOB NUT M6		2				
012	652024730	PLASTIC SADDLE WASHER 8		2				
013	652023808	BOLT M6		2				
014	652023911	LOWER HANDLE		2				
015	652024705	CABLE CLIP		1				
016	652023990	TORSION SPRING LEFT(REAR FLAP		1				
017	652023989	PLASTIC PIN		1				
018	652023994	REAR FLAP		1				
019	652023989	PLASTIC PIN		1				
020	652023991	TORSION SPRING RIGHT(REAR FLAP		1				
021	652023996	GRASS CATCHER BAG DOLMAR		1				
022	652024707	GRASS CATCHER BAG SUPPORT		1				
023	652023992	DECK RED		1				
024	652026446	TAPPING SCREW 5X25 WITH WR		2				
025	652023982	CORD CLAMP		1				
026	652026443	TAPPING SCREW 4X12		2				
027	652023983	TAPPING SCREW 3X18		1				
028	652023826	TERMINAL BLOCK		1				
029	652024708	CIRCUIT BOARD		1				
030	652023993	MOTOR COVER		1				
031	652024720	TAPPING SCREW 4X16		7				
032	652023904	REAR WHEEL COVER		2				
033	652023934	RETAINING RING S-10		2				
034	652023986	REAR WHEEL		2				
035	652023988	REAR WHEEL AXLE		2				
036	652023987	REAR WHEEL AXLE SLEEVE		2				
037	652023985	REAR AXLE CAP		2				

Model No.EV3213 ELECTRIC SCARIFIER

Item	Parts No.	Description	I/C	Qty	New/Old	Opt. 1	Opt. 2	Note
038	652026442	TAPPING SCREW 5X16 WITH WR		2				
039	652023905	FRONT WHEEL COVER		2				
040	652023973	NYLON INSERT HEX LOCK NUT M6		2				
041	652023937	FLAT WASHER 6		2				
042	652023981	FRONT WHEEL AXLE		2				
043	652023980	FRONT WHEEL		2				
044	652024712	TAPPING SCREW 5X18		2				
045	652023979	FRON AXLE CAP		2				
046	652026443	TAPPING SCREW 4X12		1				
047	652023978	HEIGHT ADJUSTER GRIP OUTSIDE		1				
048	652023977	HEIGHT ADJUSTER SPRING		1				
049	652023803	FLAT WASHER 5		1				
050	652023976	HEIGHT ADJUSTER GRIP INSIDE		1				
051	652026443	TAPPING SCREW 4X12		3				
052	652023975	FRONT WHEEL AXLE RIGHT		1				
053	652023974	FRONT WHEEL AXLE LEFT		1				
054	941201-0	FLAT WASHER 8		1				
055	652024713	NYLON INSERT HEX LOCK NUT M8		1				
056	652024715	MOTOR ASSY 230V		1				
D10		INC. 57-61						
057	652023960	CARBON BRUSH 2PCS/SET		1				
058	652023959	BRUSH HOLDER INSIDE		2				
059	652024716	BRUSH HOLDER OUTSIDE		2				
060	652023957	TAPPING SCREW 4X12 WITH WR		4				
061	652023947	COGGED BELT 16 X 410 LI		1				
062	652026444	TAPPING SCREW 4X16 WITH WR		2				
063	652024717	LOWER BEARING BOX RETAINER		1				
064	652023939	TAPPING SCREW 4X20 WITH WR		4				
065	652023937	FLAT WASHER 6		2				
066	652023936	SPRING WASHER 6		2				
067	652023935	HEX. BOLT M6X45		2				
A01	652024718	SCARIFIER DRUM FOR SCARYING		1				
A02	652024719	SCARIFIER DRUM FOR LAWN RAKING		1				

Please order the parts with part number.

Print Date 8/9/2020