Retrouvez cette piece sur nhp-motoculture.fr en cliquant sur la reference

Model No.EV3618 ELECTRIC SCARIFIER

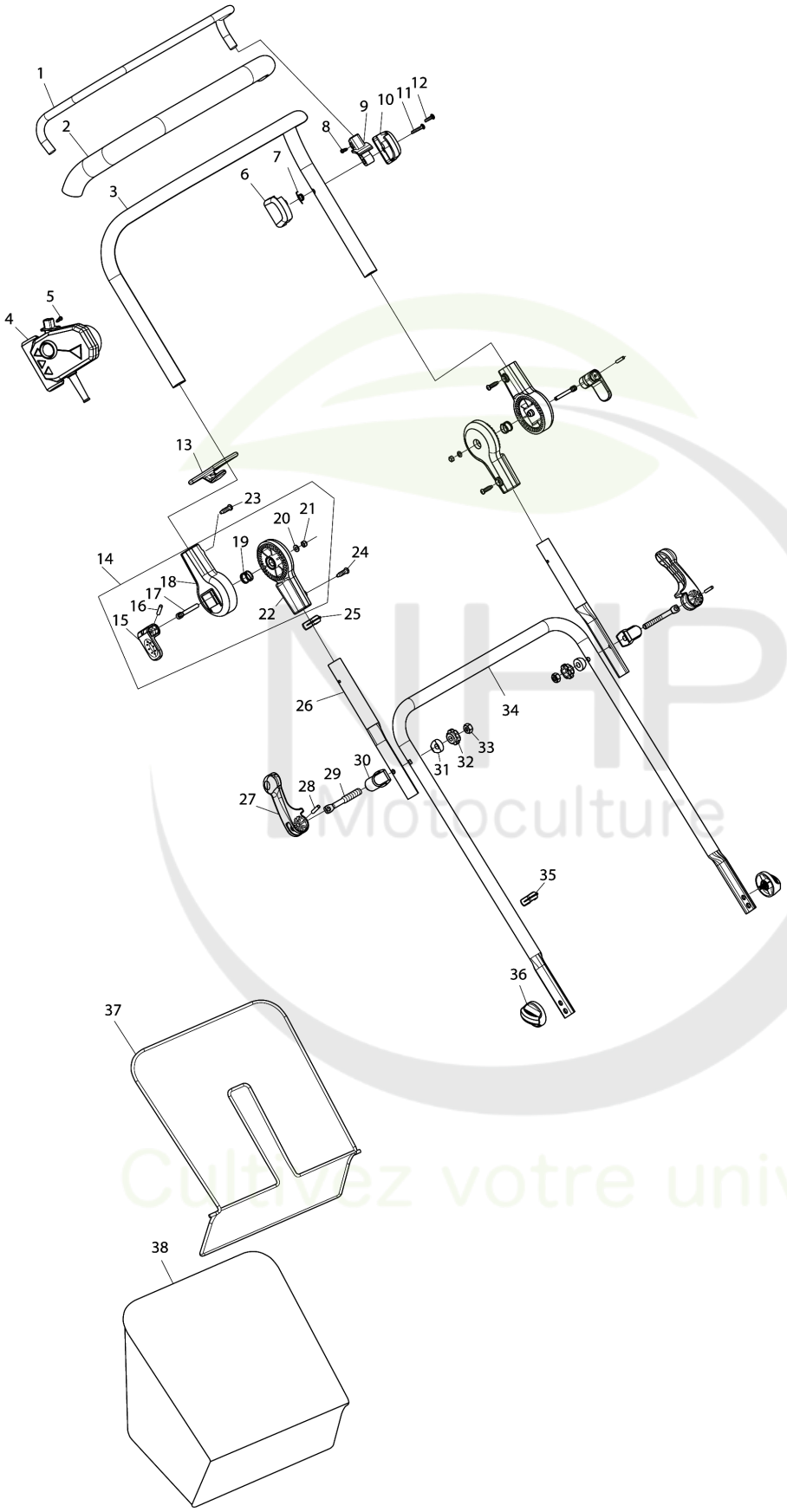

Model No.EV3618 ELECTRIC SCARIFIER

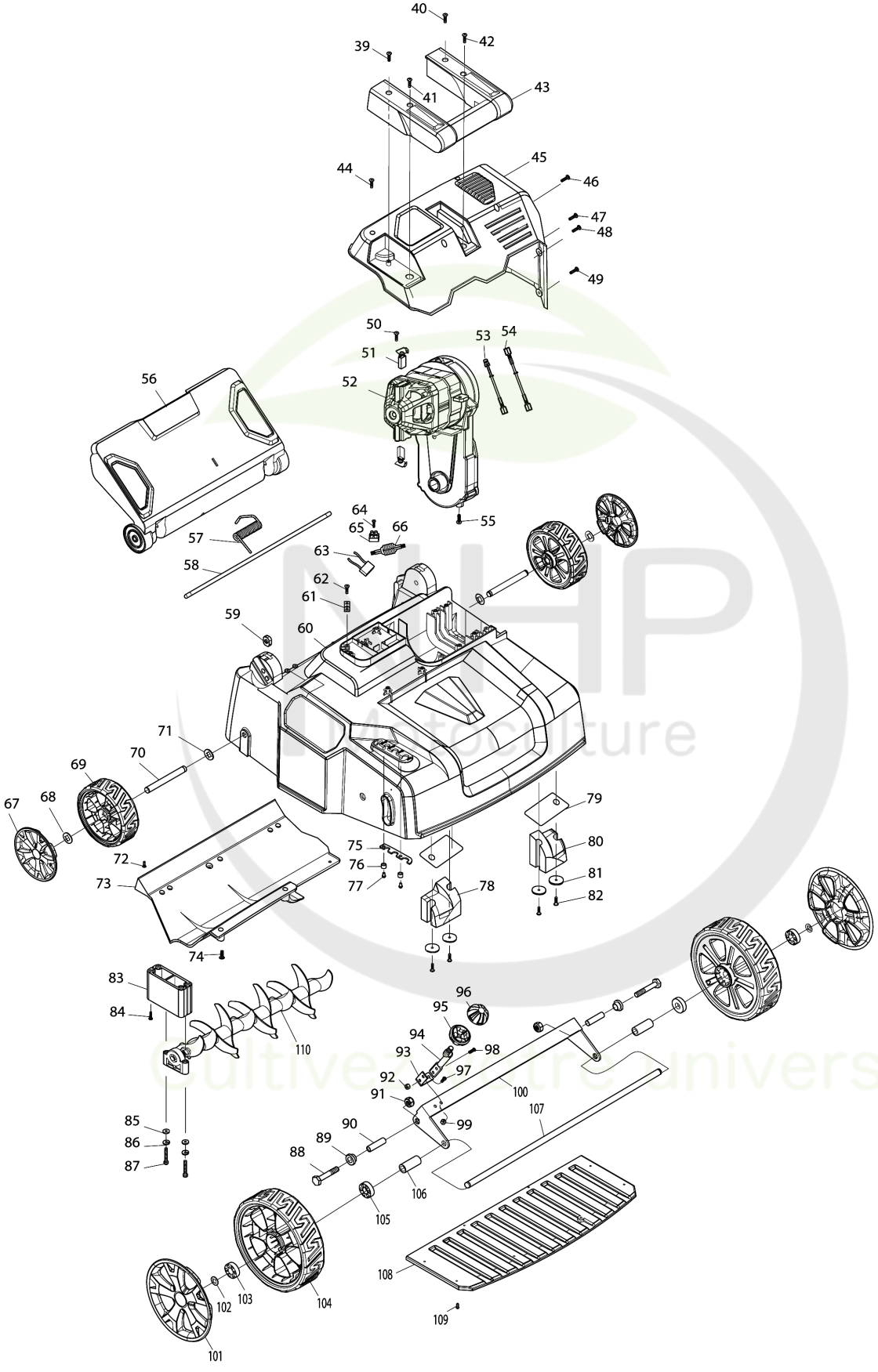

Model No.EV3618 ELECTRIC SCARIFIER

Item	Parts No.	Description	I/C	Qty	New/Old	Opt. 1	Opt. 2	Note
001	652023784	SWITCH LEVER		1				
002	652023789	SOFT FOAM GRIP		1				
003	652023790	UPPER HANDLE BAR		1				
004	652024722	SWITCH BOX ASSY (EU PLUG)		1				
C10	YA00000676	TAPPING SCREW 4X18		6				
C20	652023982	CORD CLAMP		1				
C30	652026443	TAPPING SCREW 4X12		2				
005	652024721	SELF DRILLING SCREW 3.5X10		1				
006	652023795	SPRING BOX RIGHT		1				
007	YA00000737	TORSION SPRING		1				
008	652024721	SELF DRILLING SCREW 3.5X10		1				
009	652023794	SWITCH LEVER END LEFT		1				
010	652023793	SPRING BOX LEFT		1				
011	652023792	TAPPING SCREW ST4X25		1				
012	YA00000676	TAPPING SCREW 4X18		1				
013	652023811	CABLE HANGER		1				
014	YA00000703	TENSI0N LEVER SMALL ASSY		2				
D10		INC. 15-22						
015	652024723	TENSI0N LEVER SMALL		2				
016	652023800	PIN 4		2				
017	652023799	TENSION BOLT M5		2				
018	652023797	UPPER HANDLE JOINT		2				
019	652023798	COMPRESSION SPRING		2				
020	652023803	FLAT WASHER 5		2				
021	652023804	NYLON INSERT HEX. LOCK NUT M5		2				
022	652023802	LOWER HANDLE JOINT		2				
023	652023796	SELF DRILLING SCREW 4.8X20		2				
024	652023796	SELF DRILLING SCREW 4.8X20		2				
025	652023810	CABLE CLIP		1				
026	652023805	HANDLE BAR CENTER		2				
027	652024725	TENSI0N LEVER LARGE		2				
028	652024727	SPRING PIN 6X20		2				
029	652024728	TENSION BOLT M8		2				
030	652024729	SADDLE RETAINER 8		2				
031	652024730	PLASTIC SADDLE WASHER 8		2				
032	652024731	KNOB		2				
033	652024732	HEX. NUT 8		2				
034	652024733	LOWER HANDLE BAR		1				
035	652023810	CABLE CLIP		1				
036	652024078	KNOB BOLT M8		2				
037	652024724	GRASS CATCHER FRAME		1				

Model No.EV3618 ELECTRIC SCARIFIER

Item	Parts No.	Description	I/C	Qty	New/Old	Opt. 1	Opt. 2	Note
038	652023818	GRASS CATCHER BAG DOLMAR		1				
039	652023766	TAPPING SCREW ST4X14		1				
040	652023766	TAPPING SCREW ST4X14		1				
041	YA00000676	TAPPING SCREW 4X18		1				
042	652023792	TAPPING SCREW ST4X25		1				
043	652023903	MOTOR COVER HANDLE		1				
044	652023766	TAPPING SCREW ST4X14		6				
045	652023829	MOTER COVER		1				
046	652023766	TAPPING SCREW ST4X14		1				
047	652023766	TAPPING SCREW ST4X14		1				
048	YA00000631	TAPPING SCREW 4X10		1				
049	YA00000631	TAPPING SCREW 4X10		1				
050	652023766	TAPPING SCREW ST4X14		2				
051	652024748	CARBON BRUSH 2PCS/SET		1				
052	652023856	MOTOR ASSY 230V		1				
C10	652023876	COGGED BELT 14 X 300 LI		1				
C20	652025580	COGGED BELT 15 X 300 LI		1				
D10		INC. 51,53,54						
053	652024743	CONNECTION WIRE L=85		1				
054	652024744	CONNECTION WIRE L=220		1				
055	YA00000630	PAN HEAD SCREW M4X12 WITH WR		2				
056	652023815	REAR FLAP		1				
057	652023820	REAR FLAP TORSION SPRING		1				
058	652024726	REAR FLAP HINGE ROD		1				
059	652023814	RECTANGLAR NUT M8		2				
060	652024734	DECK RED		1				
061	652023982	CORD CLAMP		1				
062	652023766	TAPPING SCREW ST4X14		2				
063	652023827	CAPACITOR		1				
064	652023825	TAPPING SCREW 3X22		1				
065	652023826	TERMINAL BLOCK		2				
066	652023828	CHOKE COIL		1				
067	652023904	REAR WHEEL COVER		2				
068	652023831	PUSH NUT 10		2				
069	652023835	REAR WHEEL		2				
070	652024735	REAR AXLE		2				
071	652023831	PUSH NUT 10		2				
072	652024742	TRUSS HEAD TAPPING SCREW 3X12		5				
073	652024736	DRUM HOUSE PROTECTION PANEL		1				
074	YA00000655	TRUSS HEAD TAPPING SCREW 4X12		3				

Model No.EV3618 ELECTRIC SCARIFIER

Item	Parts No.	Description	I/C	Qty	New/Old	Opt. 1	Opt. 2	Note
075	652023906	HEIGHT ADJUSTER STOP PLATE		1				
076	652024737	SLEEVE 5		2				
077	652023661	TRUSS HEAD TAPPING SCREW 3X8		2				
078	652024740	WEIGHT FRONT RIGHT		1				
079	YA00000675	RUBBER SHEET		2				
080	652024739	WEIGHT FRONT LEFT		1				
081	652023854	CLAMP WASHER 4		4				
082	652023792	TAPPING SCREW ST4X25		4				
083	652023940	DRUM HOLDER RIGHT SIDE		1				
084	652023939	TAPPING SCREW 4X20 WITH WR		4				
085	652023937	FLAT WASHER 6		2				
086	652023936	SPRING WASHER 6		2				
087	652023935	HEX. BOLT M6X45		2				
088	652023846	HEX. BOLT M8		2				
089	652023845	FRONT AXLE SUPPORT RING		2				
090	652023844	FRONT AXLE SUPPORT SLEEVE		2				
091	652023843	NYLON INSERT HEX. LOCK NUT M8		2				
092	652023804	NYLON INSERT HEX. LOCK NUT M5		2				
093	652023841	HEIGHT ADJUSTMENT LEAF SPRING		1				
094	652024741	HEIGHT ADJUSTMENT LEVER		1				
095	652023837	HEIGHT ADJUSTMENT GRIP LOWER		1				
096	652023836	HEIGHT ADJUSTMENT GRIP UPPER		1				
097	652023840	PAN HEAD SCREW M5X12		2				
098	652023840	PAN HEAD SCREW M5X12		2				
099	652023804	NYLON INSERT HEX. LOCK NUT M5		2				
100	652023842	FRONT AXLE SUPPORT		1				
101	652023905	FRONT WHEEL COVER		2				
102	652023831	PUSH NUT 10		2				
103	652024745	PLASTIC BEARING		2				
104	652026437	FRONT WHEEL		2	*			
104-1	652023847	FRONT WHEEL	<	2				
105	652024745	PLASTIC BEARING		2				
106	652023848	FRONT AXLE SLEEVE		2				
107	652024747	FRONT AXLE		1				
108	652023850	FRONT UNDER PANEL		1				
109	652023851	TAPPING SCREW 3X12		8				
110	652024746	SCARIFIER DRUM FOR SCARYING		1				

Model No.EV3618 ELECTRIC SCARIFIER

Item	Parts No.	Description	I/C	Qty	New/Old	Opt. 1	Opt. 2	Note
A01	652024749	SCARIFIER COMBINATION DRUM		1				
A02	652024750	SCARIFIER DRUM FOR LAWN RAKING		1				

Please order the parts with part number.

Print Date 8/9/2020

NHP Motoculture
Cultivez votre univers