Retrouvez cette piece sur nhp-motoculture.fr en cliquant sur la reference

Model No.:EV3000 ELECTRIC SCARIFIER

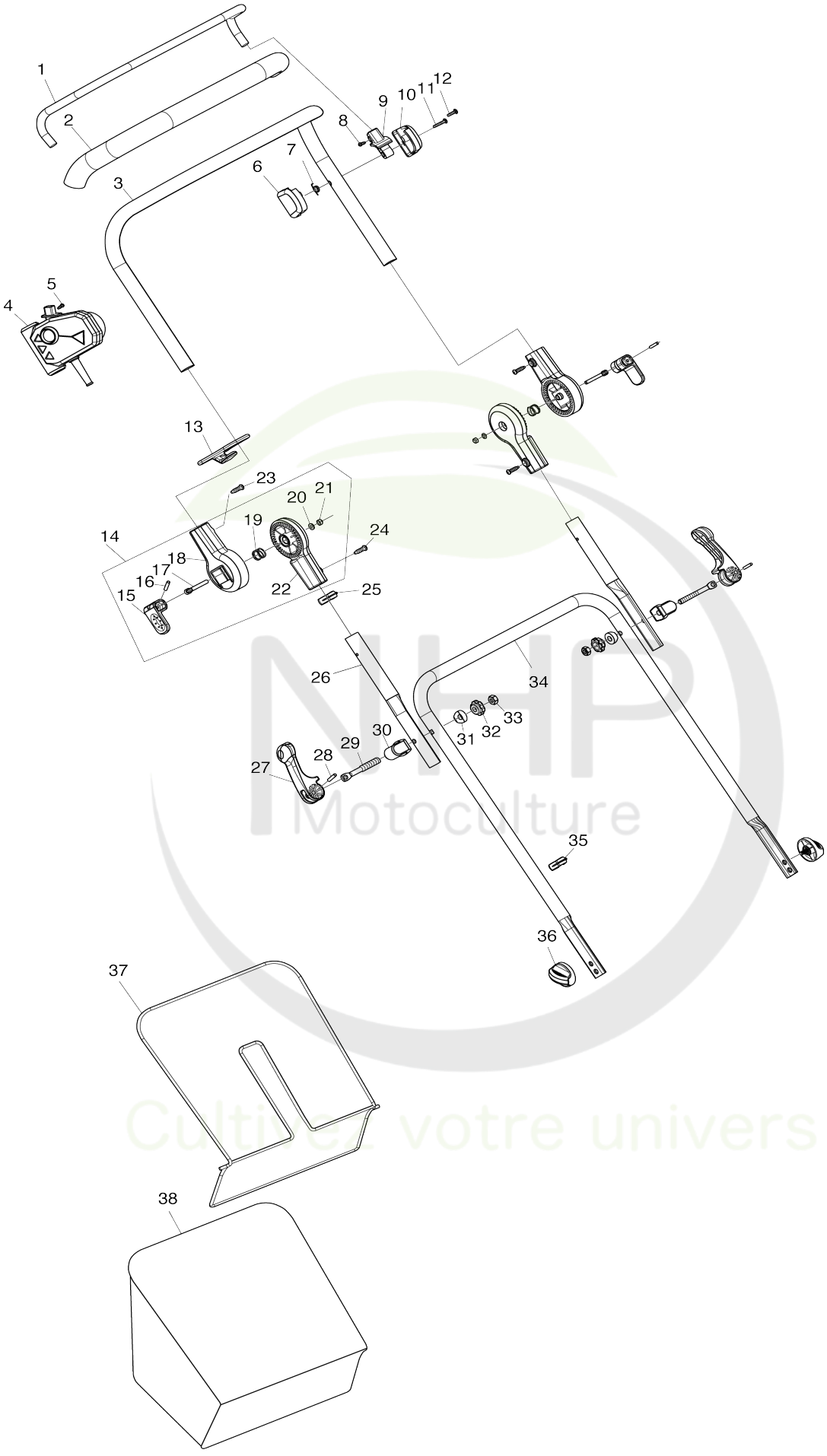

Model No.UV3600 ELECTRIC SCARIFIER

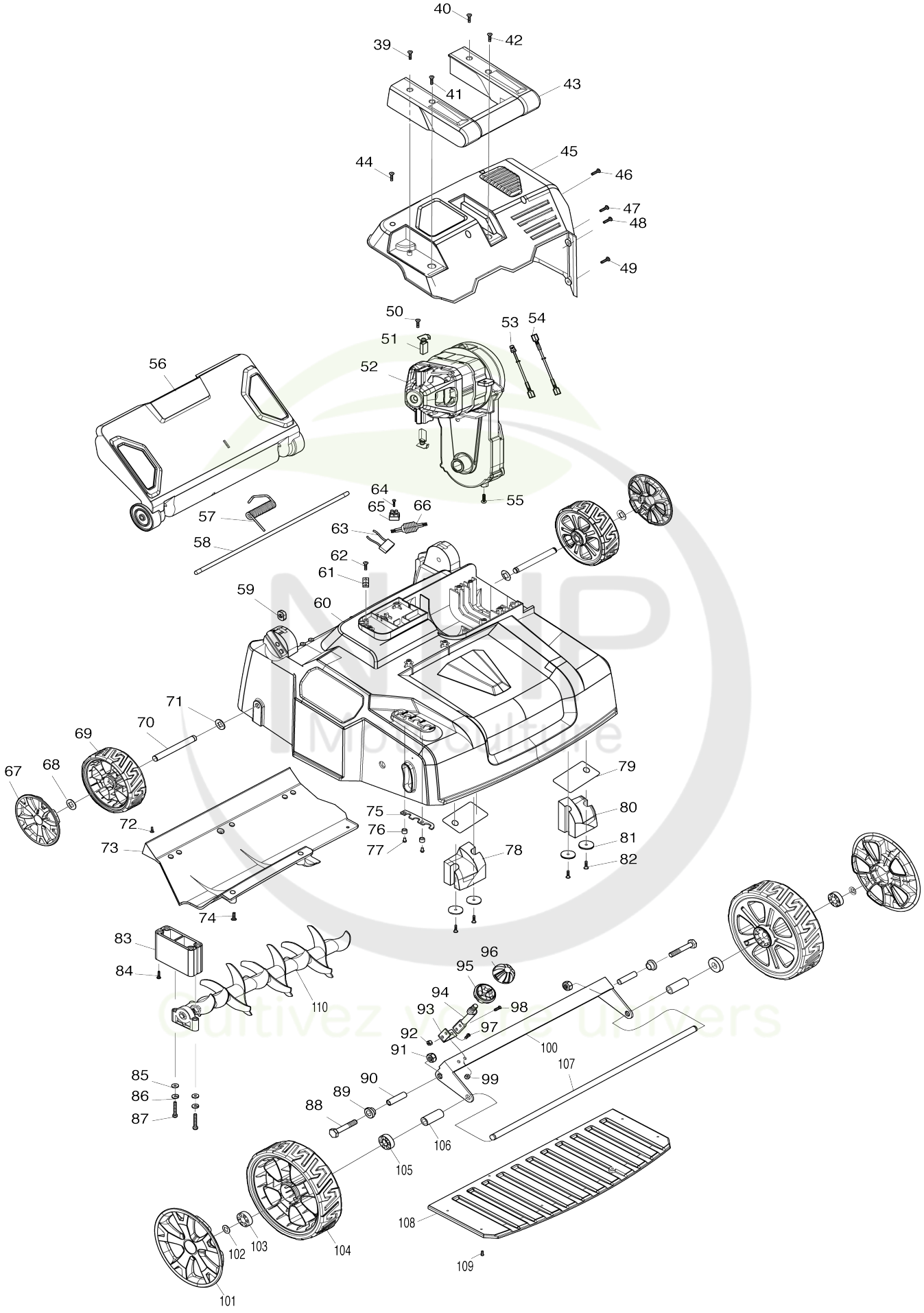

Model No.UV3600 ELECTRIC SCARIFIER

Numéro d'article	N ° de pièces	Description	Interchangeabilité	Q'ty	Nouvelle / ancienne	Note 1	Note 2
001	652023784	SWITCH LEVER		1			
002	652023789	SOFT FOAM GRIP		1			
003	652023790	UPPER HANDLE BAR		1			
004	652024722	SWITCH BOX ASSY (EU PLUG)		1			
C10	YA00000676	TAPPING SCREW 4X18		6			
C20	652023982	CORD CLAMP		1			
C30	652026443	TAPPING SCREW 4X12		2			
005	652024721	SELF DRILLING SCREW 3.5X10		1			
006	652023795	SPRING BOX RIGHT		1			
007	YA00000737	TORSION SPRING		1			
008	652024721	SELF DRILLING SCREW 3.5X10		1			
009	652023794	SWITCH LEVER END LEFT		1			
010	652023793	SPRING BOX LEFT		1			
011	652023792	TAPPING SCREW ST4X25		1			
012	YA00000676	TAPPING SCREW 4X18		1			
013	652023811	CABLE HANGER		1			
014	YA00000703	TENSI0N LEVER SMALL ASSY		2			
014		INC. 15-22					
015	652024723	TENSI0N LEVER SMALL		2			
016	652023800	PIN 4		2			
017	652023799	TENSION BOLT M5		2			
018	652023797	UPPER HANDLE JOINT		2			
019	652023798	COMPRESSION SPRING		2			
020	652023803	FLAT WASHER 5		2			
021	652023804	NYLON INSERT HEX. LOCK NUT M5		2			
022	652023802	LOWER HANDLE JOINT		2			
023	652023796	SELF DRILLING SCREW 4.8X20		2			
024	652023796	SELF DRILLING SCREW 4.8X20		2			
025	652023810	CABLE CLIP		1			
026	652023805	HANDLE BAR CENTER		2			
027	652024725	TENSI0N LEVER LARGE		2			
028	652024727	SPRING PIN 6X20		2			
029	652024728	TENSION BOLT M8		2			
030	652024729	SADDLE RETAINER 8		2			
031	652024730	PLASTIC SADDLE WASHER 8		2			
032	652024731	KNOB		2			
033	652024732	HEX. NUT 8		2			
034	652024733	LOWER HANDLE BAR		1			
035	652023810	CABLE CLIP		1			
036	652024078	KNOB BOLT M8		2			
037	652024724	GRASS CATCHER FRAME		1			
038	652025252	GRASS CATCHER BAG MAKITA		1	*		
038-1	YA00000674	COLLECTION BAG	O	1			
039	652023766	TAPPING SCREW ST4X14		1			
040	652023766	TAPPING SCREW ST4X14		1			
041	YA00000676	TAPPING SCREW 4X18		1			
042	652023792	TAPPING SCREW ST4X25		1			

NHP Motoculture
Cultivez votre univers

043	652023903	MOTOR COVER HANDLE		1			
044	652023766	TAPPING SCREW ST4X14		6			
045	652023829	MOTER COVER		1			
046	652023766	TAPPING SCREW ST4X14		1			
047	652023766	TAPPING SCREW ST4X14		1	*		
047-1	YA00000813	SELF TAPPING SCREW ST4X10	X	1			
048	YA00000631	PAN HEAD SCREW M5X14 WITH WR		1	*		
048-1	652023766	TAPPING SCREW ST4X14	X	1			
049	YA00000631	PAN HEAD SCREW M5X14 WITH WR		1	*		
049-1	YA00000813	SELF TAPPING SCREW ST4X10	O	1			
050	652023766	TAPPING SCREW ST4X14		2			
051	652024748	CARBON BRUSH 2PCS/SET		1	*		
051-1	YA00001195	CARBON BRUSH 2PCS/SET	S	1			
052	652023856	MOTOR ASSY 230V		1	*		
C10	652023876	COGGED BELT 14 X 300 LI		1	*		
C20	652025580	COGGED BELT 15 X 300 LI		1	*		
052		INC. 51,53,54			*		
052-1	YA00001593	MOTOR ASSY 230V	O	1			
C11	YA00001590	COGGED BELT 14 X 300 LI	O	1			
C21	YA00001591	COGGED BELT 15 X 300 LI	O	1			
052-1		INC. 51,53,54					
053	652024743	CONNECTION WIRE L=85		1			
054	652024744	CONNECTION WIRE L=220		1			
055	YA00000630	PAN HEAD SCREW M4X12 WITH WR		2			
056	652023815	REAR FLAP		1			
057	652023820	REAR FLAP TORSION SPRING		1			
058	652024726	REAR FLAP HINGE ROD		1			
059	652023814	RECTANGLAR NUT M8		2			
060	652025253	DECK BLUE		1	*		
060-1	YA00000686	DECK BLUE	X	1			
061	652023982	CORD CLAMP		1			
062	652023766	TAPPING SCREW ST4X14		2			
063	652023827	CAPACITOR		1			
064	652023825	TAPPING SCREW 3X22		1			
065	652023826	TERMINAL BLOCK		2	*		
065-1	YA00001313	TERMINAL BLOCK	X	1			
066	652023828	CHOKE COIL		1			
067	652023904	REAR WHEEL COVER		2			
068	652023831	PUSH NUT 10		2			
069	652023835	REAR WHEEL		2			
070	652024735	REAR AXLE		2			
071	652023831	PUSH NUT 10		2			
072	652024742	TRUSS HEAD TAPPING SCREW 3X 12		5			
073	652024736	DRUM HOUSE PROTECTION PAN EL		1			
074	YA00000655	TRUSS HEAD TAPPING SCREW 4X 12		3			
075	652023906	HEIGHT ADJUSTER STOP PLATE		1			
076	652024737	SLEEVE 5		2			

077	652023661	TRUSS HEAD TAPPING SCREW 3X 8		2	*		
077-1	652024720	TAPPING SCREW 4X16	X	2			
078	652024740	WEIGHT FRONT RIGHT		1			
079	YA00000675	RUBBER SHEET		2			
080	652024739	WEIGHT FRONT LEFT		1			
081	652023854	CLAMP WASHER 4		4			
082	652023792	TAPPING SCREW ST4X25		4			
083	652023940	DRUM HOLDER RIGHT SIDE		1			
084	652023939	TAPPING SCREW 4X20 WITH WR		4			
085	652023937	FLAT WASHER 6		2			
086	652023936	SPRING WASHER 6		2			
087	652023935	HEX. BOLT M6X45		2			
088	652023846	HEX. BOLT M8		2			
089	652023845	FRONT AXLE SUPPORT RING		2			
090	652023844	FRONT AXLE SUPPORT SLEEVE		2			
091	652023843	NYLON INSERT HEX. LOCK NUT M8		2			
092	652023804	NYLON INSERT HEX. LOCK NUT M5		2			
093	652023841	HEIGHT ADJUSTMENT LEAF SPRI NG		1			
094	652024741	HEIGHT ADJUSTMENT LEVER		1			
095	652023837	HEIGHT ADJUSTMENT GRIP LOW ER		1			
096	652023836	HEIGHT ADJUSTMENT GRIP UPPE R		1			
097	652023840	PAN HEAD SCREW M5X12		2			
098	652023840	PAN HEAD SCREW M5X12		2			
099	652023804	NYLON INSERT HEX. LOCK NUT M5		2			
100	652023842	FRONT AXLE SUPPORT		1			
101	652023905	FRONT WHEEL COVER		2			
102	652023831	PUSH NUT 10		2			
103	652024745	PLASTIC BEARING		2			
104	652026437	FRONT WHEEL		2	*		
104-1	652023847	FRONT WHEEL	<	2			
105	652024745	PLASTIC BEARING		2			
106	652023848	FRONT AXLE SLEEVE		2			
107	652024747	FRONT AXLE		1			
108	652023850	FRONT UNDER PANEL		1			
109	652023851	TAPPING SCREW 3X12		8			
110	652024746	SCARIFIER DRUM FOR SCARYING		1			
A01	652024749	SCARIFIER COMBINATION DRUM		1			
A02	652024750	SCARIFIER DRUM FOR LAWN RAK ING		1			

NHP Motoculture
Cultivez votre univers

Veuillez indiquer les pièces n ° lorsque votre commande. Date d'impression 12/29/2025