Retrouvez cette piece sur nhp-motoculture.fr en cliquant sur la reference

BBA520

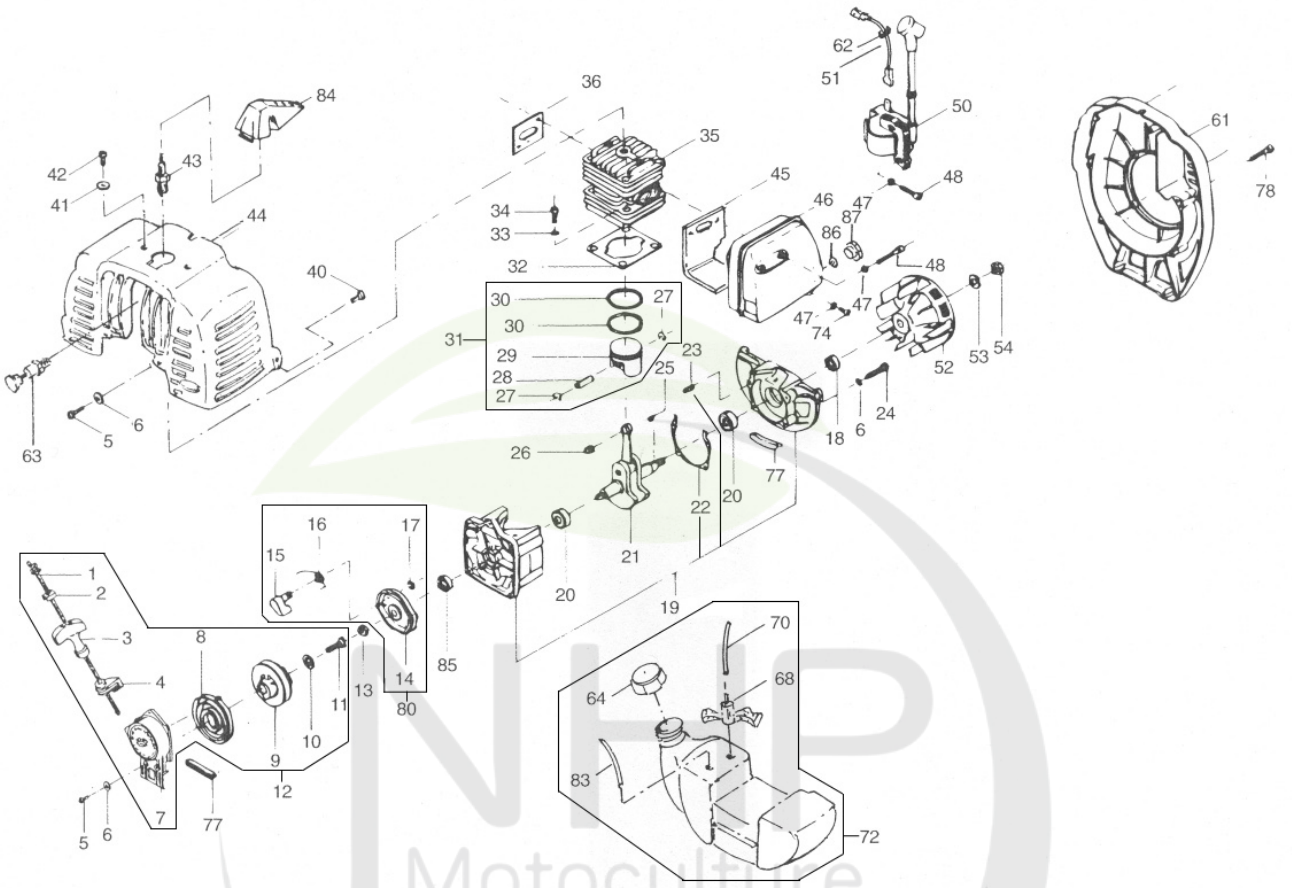

NHP Motoculture
Cultivez votre univers

BBA520 - FIG. 1

RIF.	COD.	GR. LIST	RIF.	COD.	GR. LIST
1	BB630070	P03	54	BB060300	P01
2	BB510190	P01	61	BB480680/RO	P31
3	BB540120	P14	62	BB541510	P01
4	BB541310	P09	63	BB752340	P17
5	BB030210	P01	64	BB723730	P13
6	BB090150	P01	68	BB330820	P08
7	BB480650	P22	70	BB542460	P03
8	BB180240	P12	72	BB723360	P30
9	BB541320	P15	74	BB030680	P01
10	BB090720	P01	77	BB541340	P01
11	BB030140	P01	78	BB030350	P01
12	BB721420/NE	P30	80	BB722460	P19
13	BB060370	P03	83	BB542520	P03
14	BB480900	P14	84	BB542030/RO	P09
15	BB541330	P03	85	BB240370	P11
16	BB180200	P03	86	BB511000	P99
17	BB120160	P01	87	BB091330	P05
18	BB240030	P07			
19	BB721430	P36			
20	BB270070	P13			
21	BB751600	P36			
22	BB240260	P02			
23	BB420200	P01			
24	BB030620	P01			
25	BB420030	P02			
26	BB270050	P13			
27	BB150040	P01			
28	BB420040	P07			
29	BB480720	P27			
30	BB150250	P13			
31	BB721360	P31			
32	BB240270	P02			
33	BB090620	P01			
34	BB030630	P01			
35	BB480640	P42			
36	BB240290	P02			
40	BB030800	P01			
41	BB090840	P01			
42	BB030610	P01			
43	TN00004000	P18			
44	BB480670/RO	P27			
45	BB240430	P09			
46	BB750860	P29			
47	BB090830	P01			
48	BB030410	P01			
50	BB450930	P30			
51	BB450340	P99			
52	BB450280	P30			
53	BB091000	P01			

NHP Motoculture
Cultivez votre univers

BBA520 - FIG. 2

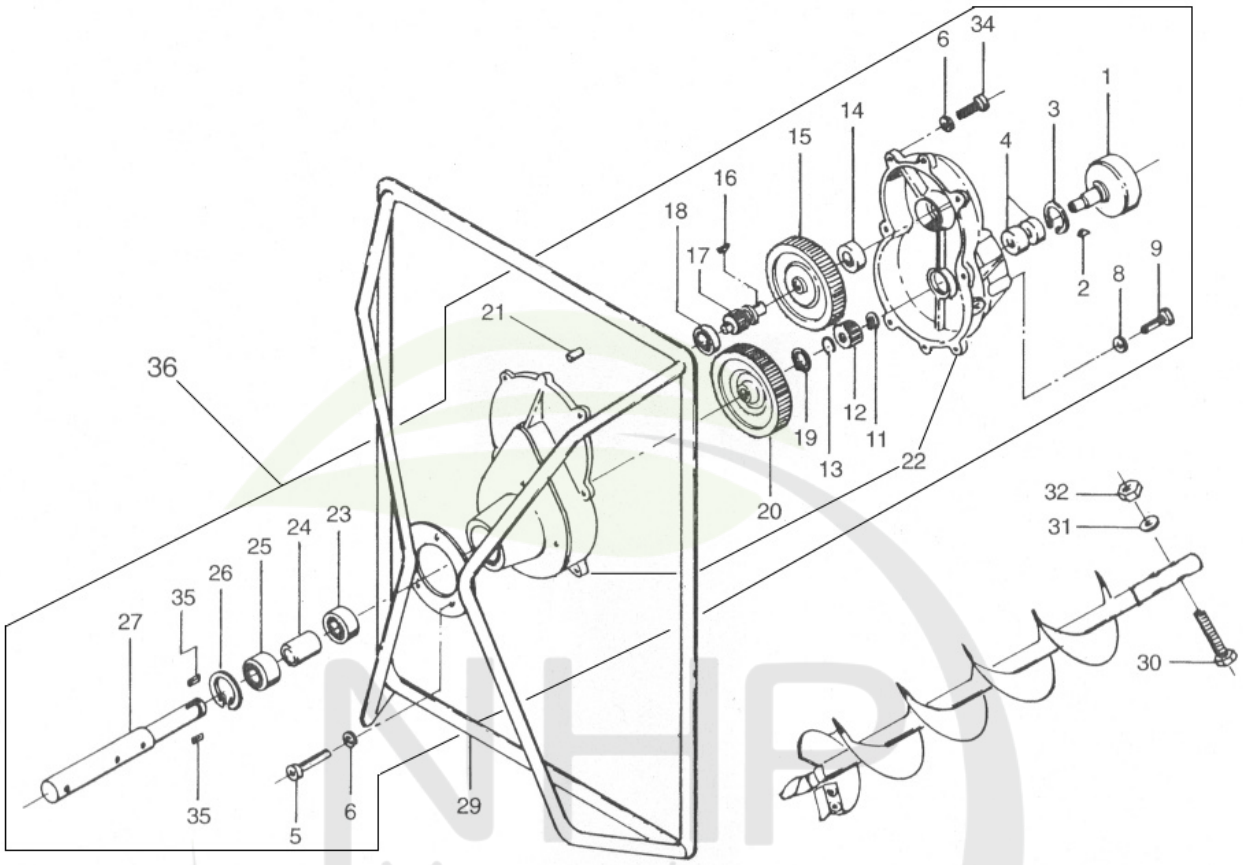

NHP Motoculture
Cultivez votre univers

BBA520 - FIG. 2

RIF.	COD.	GR. LIST	RIF.	COD.	GR. LIST
1	BB750150	R32			
2	~~BB420030~~	R02			
3	~~BB120070~~	R01			
4	~~BB270120~~	R23			
5	~~BB030090~~	R01			
6	~~BB090010~~	R01			
8	~~BB090830~~	R01			
9	~~BB030350~~	R01			
11	~~BB120050~~	R01			
12	~~BB360270~~	R29			
13	~~BB120090~~	R02			
14	~~BB270070~~	R13			
15	~~BB360280~~	R38			
16	~~BB420090~~	R04			
17	~~BB360300~~	R27			
18	~~BB270130~~	R20			
19	~~BB120260~~	R01			
20	~~BB360290~~	R38			
21	~~BB420070~~	R02			
22	~~BB726430~~	R32			
23	~~BB270140~~	R29			
24	~~BB090100~~	R05			
25	~~BB270150~~	R24			
26	~~BB120110~~	R04			
27	~~BB390110~~	R29			
29	~~BB751170~~	R40			
30	~~BB030270~~	R01			
31	~~BB090080~~	R01			
32	~~BB060030~~	R01			
34	~~BB030630~~	R01			
35	~~BB420210~~	R04			
36	~~BB721270~~	R55			

NHP Motoculture
Cultivez votre univers

BBA520 - FIG. 3

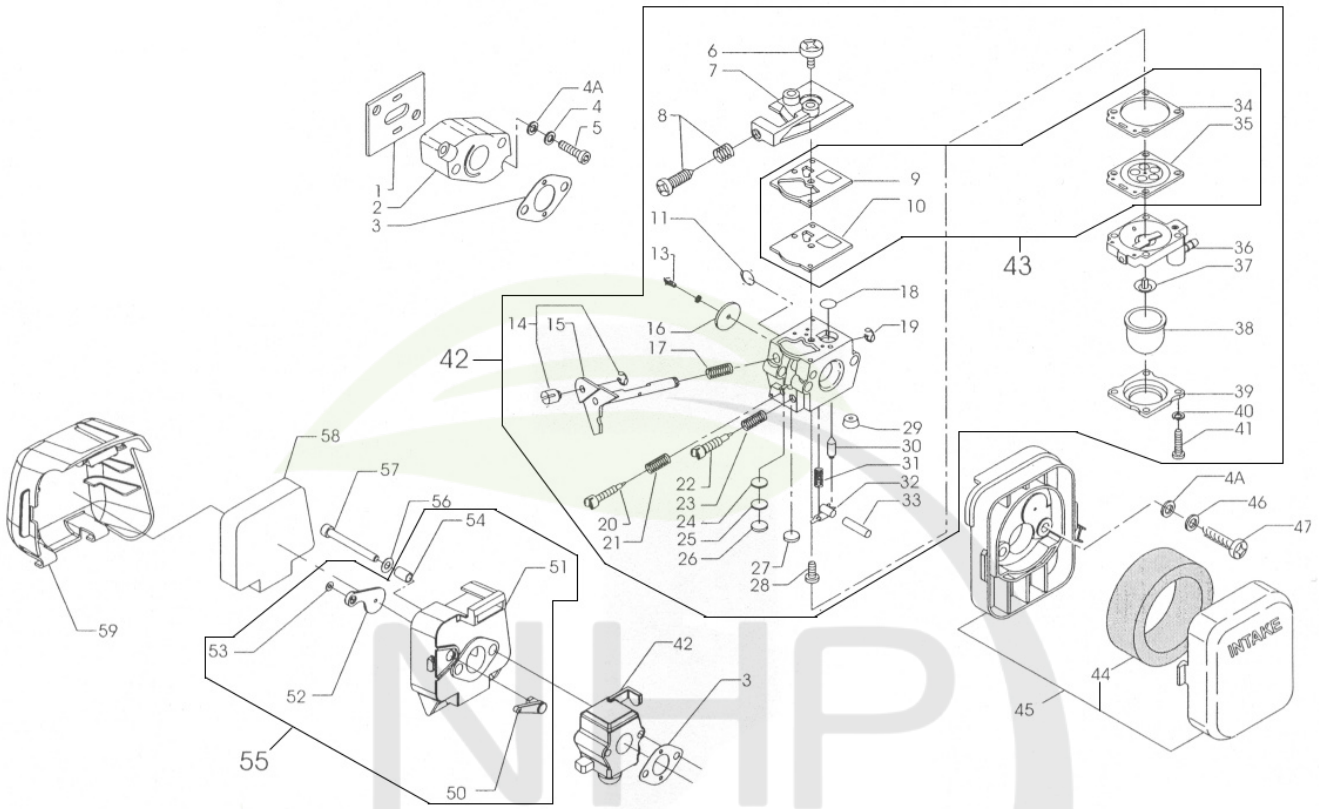

MHP Motoculture
Cultivez votre univers

BBA520 - FIG. 3

RIF.	COD.	GR. LIST
1	BB240290	P02
2	~~BB541270~~	P14
3	~~BB240130~~	P01
4	~~BB090800~~	P01
4A	~~BB090780~~	P01
5	~~BB030070~~	P01
6	~~BB96-166~~	P01
7	BB21-370	P99
8	BB96-647	P99
9	BB92-225	P03
10	BB95-118	P06
11	BB88-131	P01
13	BB96-142	P01
14	BB52-548	P05
15	BB30-1140	P14
16	BB34-158	P05
17	BB98-234	P02
18	BB140-70	P02
19	~~BB16-71~~	P03
20	BB102-330	P07
21	~~BB98-404~~	P02
22	BB102-3066	P07
23	~~BB98-405~~	P02
24	BB140-69	P01
25	~~BB16-42~~	P02
26	BB88-119	P01
27	BB88-171	P01
28	BB96-156	P01
29	BB84-613	P07
30	BB82-75	P07
31	BB98-387	P02
32	BB166-48	P02
33	~~BB144-77~~	P01
34	~~BB92-251~~	P03
35	BB95-526	P10
36	BB5-2441	P16
37	BB176-64	P04
38	~~BB188-12~~	P09
39	~~BB21-404~~	P11
40	BB090190	P01
41	~~BB96-578~~	P02
42	BB331650A	P31
43	BBD10-WAT	P20
44	~~BB332100~~	P04
45	~~BB331480~~	P19
46	~~BB090830~~	P01
47	~~BB030330~~	P01
50	~~BB543930~~	P99
51	~~BB544200~~	P99
52	BB543940	P99
53	BB120270	P01
54	BB091630	P99
55	BB725350	P20
56	BB090830	P01
57	BB031350	P99
58	BB332120	P10
59	BB543910	P99

NHP Motoculture
Cultivez votre univers

BBA520 - FIG. 4

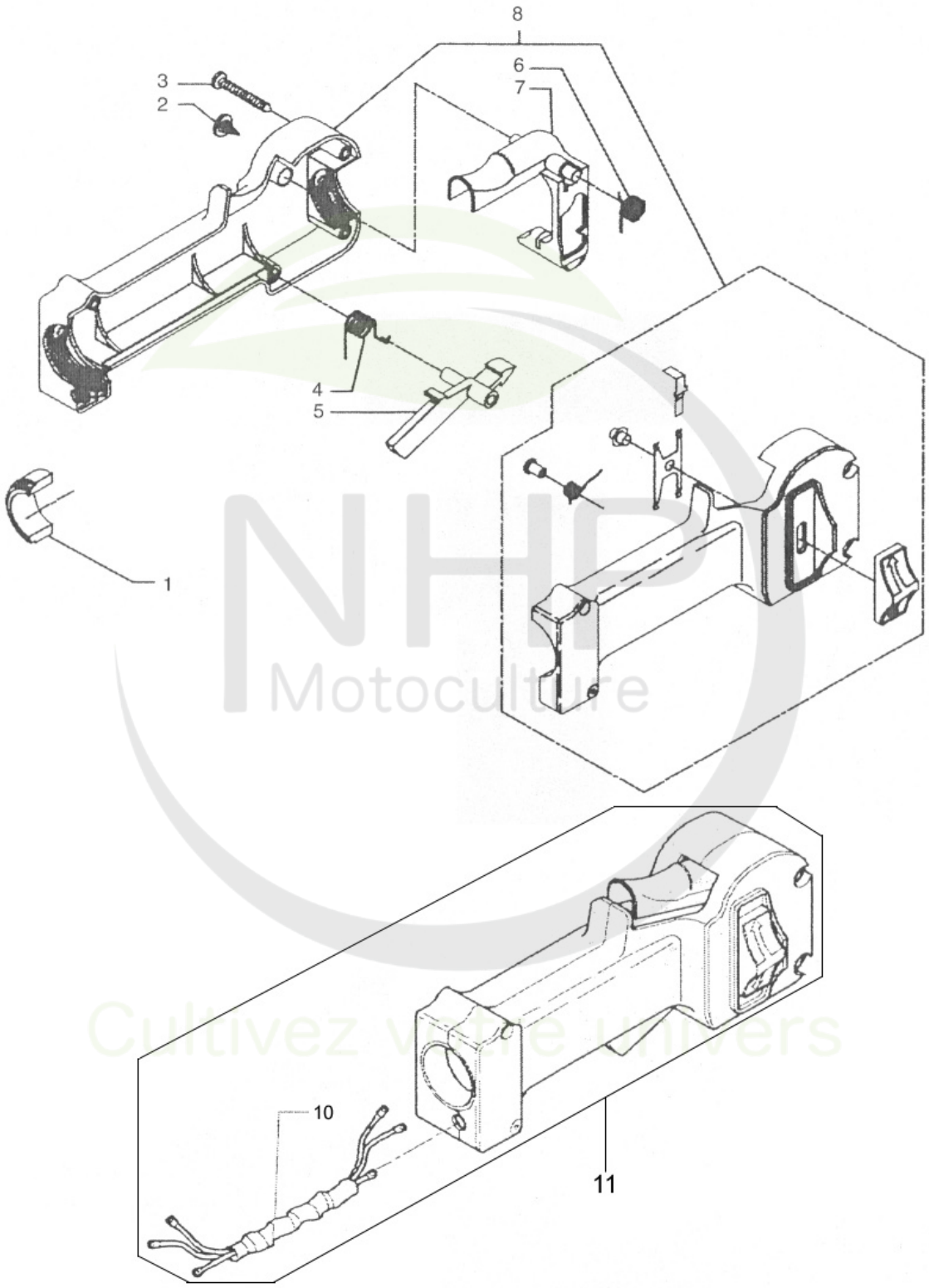

NHP Motoculture
Cultivez votre univers

BBA520 - FIG. 4

RIF.	COD.	GR. LIST	RIF.	COD.	GR. LIST
1	BB541430	R01			
2	~~BB030650~~	R01			
3	~~BB030860~~	R01			
4	~~BB180230~~	R01			
5	~~BB541410~~	R02			
6	~~BB180220~~	R01			
7	~~BB541400~~	R02			
8	~~BB750890~~	R14			
10	~~BB752040~~	RXX			
11	~~BB723090~~	RXX			

NHP Motoculture
Cultivez votre univers